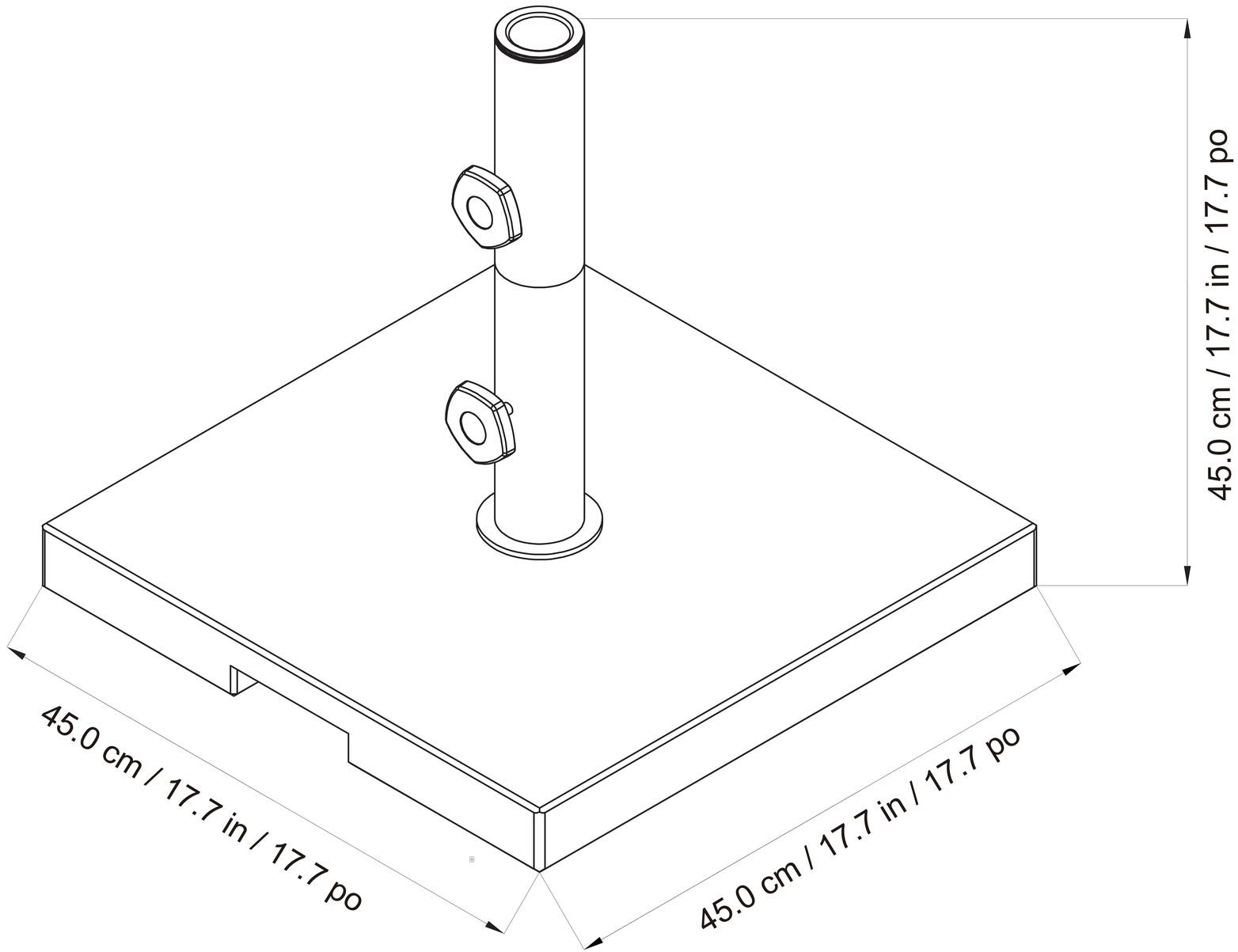
45.0 cm / 17.7 in / 17.7 po
45.0 cm / 17.7 in / 17.7 po
45.0 cm / 17.7 in / 17.7 po