Gazebo GZH4-1216BK

Aluminium Composite Roof Panels
Assembly Instructions

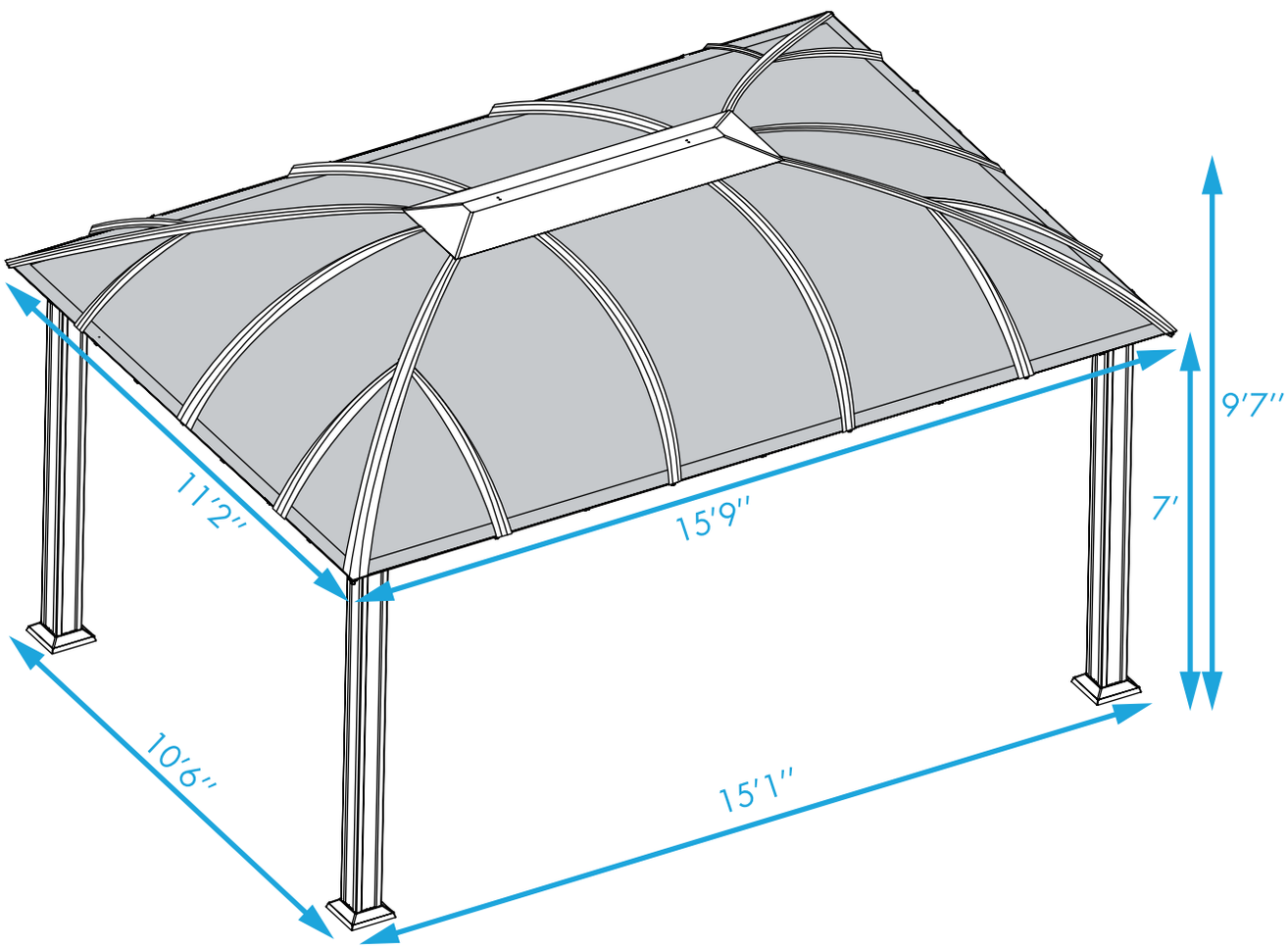

Paragon Group USA

@paragonoutdoorcompany

Customer Service:(877) 782 4482 Email:cs-outdoors@paragongroupusa.com

V1

Introduction

Thank you for purchasing the Gazebo GZ3DXL.
When properly assembled and maintained, this gazebo will provide many years of enjoyment!

These instructions include helpful hints and important information needed to safely assemble and properly maintain the gazebo. Please read these instructions completely before you begin.

Our patented gazebo has been designed for easy assembly. All steps can be completed by a team of four people. The assembly should take about two hours.

Before Starting Assembly:

CAREFULLY READ ALL THE INSTRUCTIONS BEFORE YOU BEGIN AND FOLLOW THE STEPS IN THE ORDER THEY ARE PRESENTED.

1. Make sure you have all the necessary parts:
   Compare the contents of all cartons to the List of Parts. If any parts are missing or damaged, or you have any questions, please contact Customer service: (877)782 4482 before beginning assembly.

2. Lay the parts out in separate staging areas:
   The List of Parts has the corresponding step number referenced to each part. We recommend that while you go through the list, make staging areas for each step and place the parts necessary for each step in these areas. This will save you time and effort during assembly.

3. Select a Location:
   When selecting a location for your gazebo, a flat level area is essential and if possible with proper water drainage and easy access to power and water, if neccessary.
   Choose a sunny, level position away from overhanging trees and power lines and protected from the wind as much as possible. Locate underground pipes or cables before preparing the site or anchoring the gazebo.
   Note: You may assemble the gazebo on a hard level surface and move it to its final location when finished. Make sure that there are no obstacles between the assembly area and the final position.

4. Prepare a Foundation:
   After choosing a location, proper preparation of the site is recommended. The site must be level.
   If the site is not level, create a base slightly larger than the outside dimensions of the gazebo using a perimeter of two by fours filled with either soil, sod or gravel.
   Make sure the base is square by measuring the diagonals from both directions and making sure they are equal. The gazebo is secured with pegs into holes cast with concrete.
   If you decide to have a concrete base, it is best to contact a reliable contractor to make sure it is flat and level. Make sure you have checked with your local authorities regarding any required building permits.

5. Make sure you have the proper tools:
   - Tape Measure
   - Work Gloves
   - Safety goggles
   - Phillips Screwdriver
   - Spirit Level
   - 2 Small Step Ladders
   - Wooden Mallet
   - Scissors and knife
   - Liquid soap or WD40 Lubricant
   - Hex Key (included)
   - 3/8" masonry drill bit to drill holes for the concrete anchors supplied.

NOTE: A cordless drill with Phillips head bit is highly recommended but not essential.

Safety Advice

- The gazebo must be positioned and fixed on a flat level surface.
- Dispose of all plastic bags safely. Keep them out of the reach of children.
- Keep children and pets away from the assembly area until the work is completed.
- Always wear shoes, gloves and safety goggles when working.
- Take special care not to touch overhead power lines with the aluminium profiles.
- Do not attempt to assemble the gazebo in windy or wet conditions.
- Do not position your gazebo in an area exposed to excessive wind.
- If using power tools or a ladder, always follow the manufacturers safety instructions.
- Hot items such as recently used grills, blowtorches etc. must not be stored in the gazebo.
- Make sure the gazebo complies with local building codes.

ATTENTION: DO NOT ATTEMPT TO ASSEMBLE THE GAZEBO ALONE!

Table of Contents

Introduction..... 2
Table of Contents..... 3
List of Parts..... 4
Step 1 : Assembling the Corner Profiles..... 6
Step 2 : Assembling the Rails..... 8
Step 3 : Assembling the Rails to the Corner Profles.....10
Step 4 : Securing the Gazebo to the ground .12
Step 5 : Installing the Lower Roof gable Profiles 13
Step 6 : Installing the Lower Horizontal Roof Profiles.....16
Step 7 : Installing the Roof Panels and Upper Roof Profiles.....17
Step 8 : Installing the Plastic Caps 23

General Order of Assembly

Step 1 : Assembling the Corner Profiles
Step 2 : Assembling the Rails
Step 3 : Assembling the Rails to the Corner Profles
Step 4 : Securing the Gazebo to the ground
Step 5 : Installing the Lower Roof gable Profiles
Step 6 : Installing the Lower Horizontal Roof Profiles
Step 7 : Installing the Roof Panels and Upper Roof Profiles
Step 8 : Installing the Plastic Caps

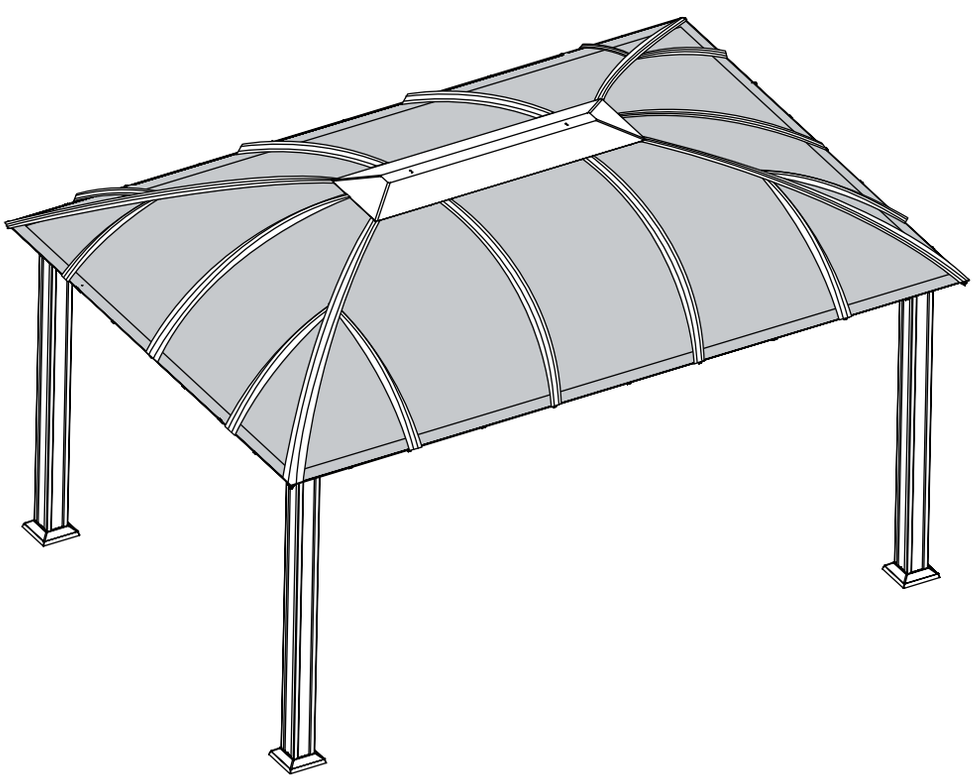

List of Parts

The gazebo is shipped in five cartons. These cartons are heavy. Be careful when lifting them.
Wear proper safety gear including work shoes, gloves and goggles.
The parts are identified by removable stickers.
Place all the parts for each step in staging areas, checking that you have all parts as you go.
If any parts are missing or damaged, contact customer service before beginning assembly:
Customer Service:(877) 782 4482 Email:cs-outdoors@paragongroupusa.com

No.	Profile	Qty	Step	Box
1	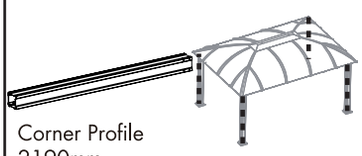 Corner Profile 2190mm	4	1	2
2	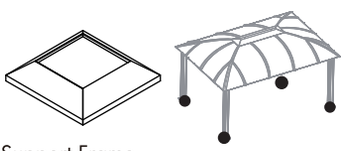 Support Frame	4	1	3
3	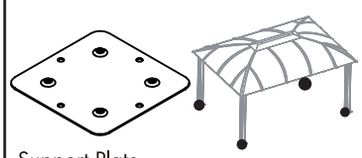 Support Plate	4	1	3
4	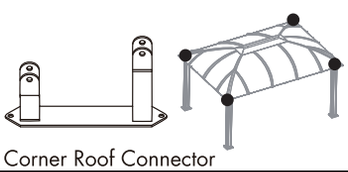 Corner Roof Connector	4	1	3
5	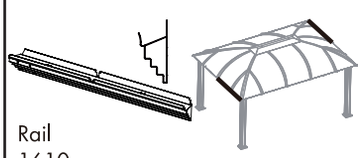 Rail 1610mm	2	2	2
6	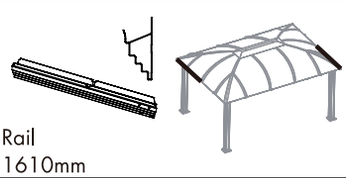 Rail 1610mm	2	2	2
7	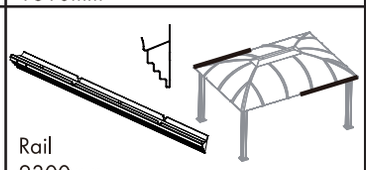 Rail 2300mm	2	2	1
8	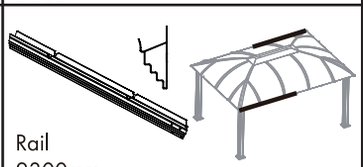 Rail 2300mm	2	2	1
9	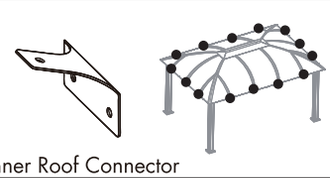 Inner Roof Connector	14	2	3

No.	Profile	Qty	Step	Box
10	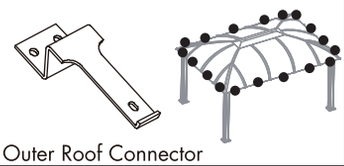 Outer Roof Connector	18	2	3
11	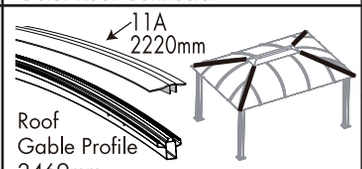 Roof Gable Profile 2469mm	4 4	5,7	1
12	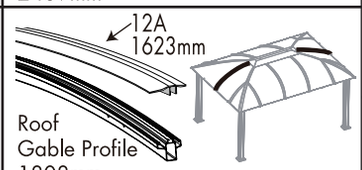 Roof Gable Profile 1808mm	2 2	5,7	1
13	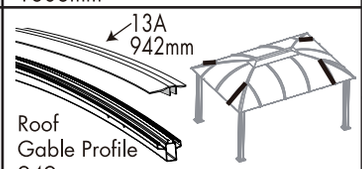 Roof Gable Profile 949mm	4 4	5,7	1 2
14	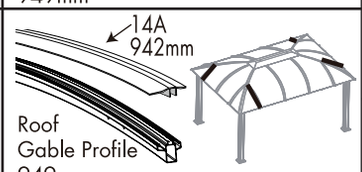 Roof Gable Profile 949mm	4 4	5,7	1 2
15	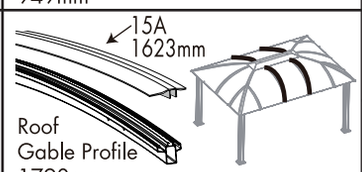 Roof Gable Profile 1790mm	4 4	5,7	1
16	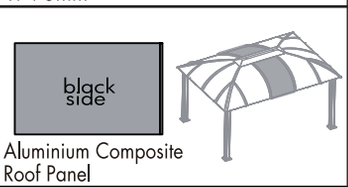 Aluminium Composite Roof Panel	2	6,7	4
17	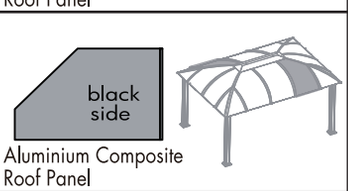 Aluminium Composite Roof Panel	2	6,7	4
18	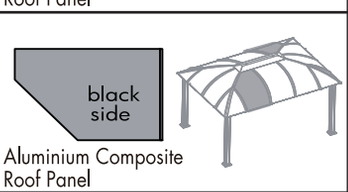 Aluminium Composite Roof Panel	2	7	4

No.	Profile	Qty	Step	Box
19	black side Aluminium Composite Roof Panel	4	7	5
20	black side Aluminium Composite Roof Panel	4	7	5
21	black side Aluminium Composite Roof Panel	2	7	5
22	black side Aluminium Composite Roof Panel	2	7	5
23	U-shaped Connector	2	5	3
24	1009mm	2	6	2
25	1000mm	2	6	2
26	1000mm	2	6	2
27	823mm	2	6	2
28	823mm	2	6	2
29		1	5	3
30	Roof Top Connector Beam	1	5	3
31	M6*8mm	36	2,5	3
32	M6*18mm	168	2,3,5,6	3
33	M6*25mm	32	1,6	3
34	M6*33mm	8	5	3
35	M6*38mm	74	7	3

No.	Profile	Qty	Step	Box
36	M6*45mm	4	5	3
37	Φ4*8mm	18	7	3
38	M6	12	5	3
39		32	3	3
40		14	8	3
41		4	8	3
42		16	4	3
43	M8x70mm	16	4	3
44		1		3
45		2	6	3
46	T - connector	6	5	3
47	X - connector	4	5	3
48	Top center connector	4	5	3
49		4	6	3
50	M6*55mm	4	5	3
51	Rail connector	4	2	1,2

We included some extra screws and bolts for your convenience.

STEP 1 Assembling the Corner Profiles

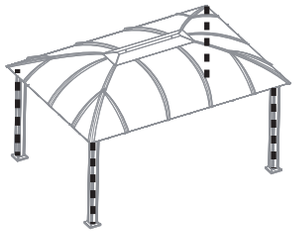

Place all the parts on a level surface.
Make sure the pieces are in the correct positions before assembling.
Carefully follow the order of assembly to ensure an easy installation.
Wear proper safety gear including work shoes, gloves and goggles.

Components

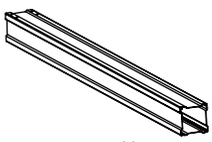

Corner profile (1)
x 4

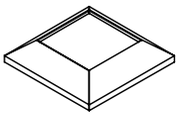

Support frame (2)
x 4

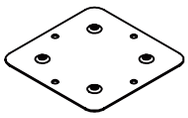

Support plate (3)
x 4

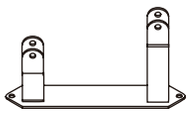

Roof connector (4)
x 4

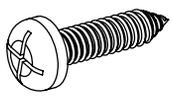

Screw (33)
x 24

ATTENTION: The corner profile (1) has two screw holes to connect it to the roof connector (4) and 8 pre-drilled screw holes to attach rails (5,6) in step 3 at its top end.
It has two screw holes to connect it to the support plate (3) at its bottom end.

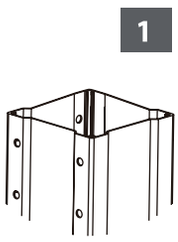

Top end

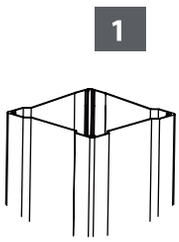

Bottom end

1.A

Place corner profiles (1) parallel to each other on the ground. Attach one roof connector (4) to each top end as shown and fasten with screws (33).

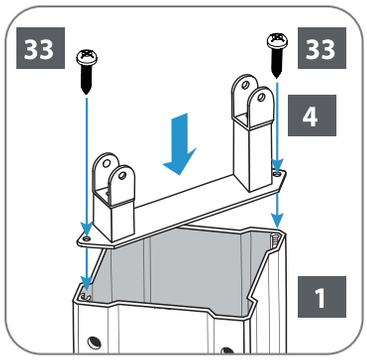

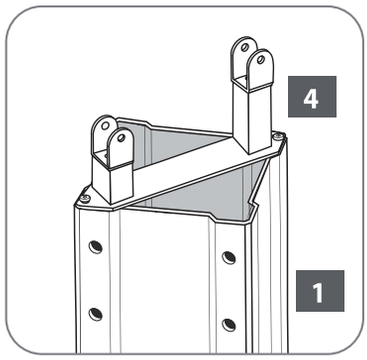

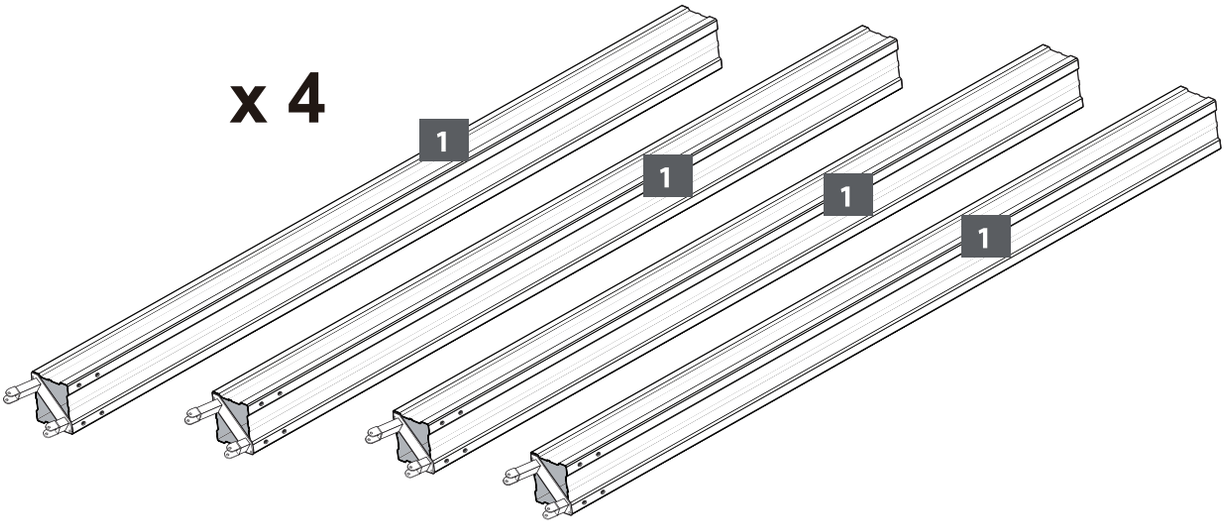

ATTENTION: Note: Do not need to assemble support frame (2) if you purchased the screen netting (GZ3DS or GZ3DXLS).

1.B

Slide support frames (2) over lower end of corner profiles (1).
Attach support plates (3) to corner profiles as shown, using screws (33) for each plate.

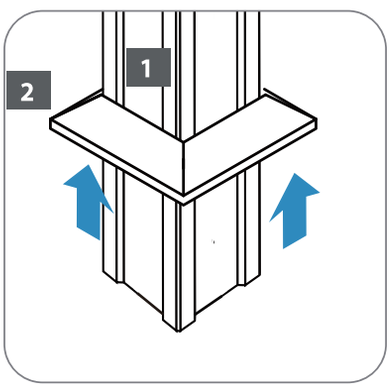

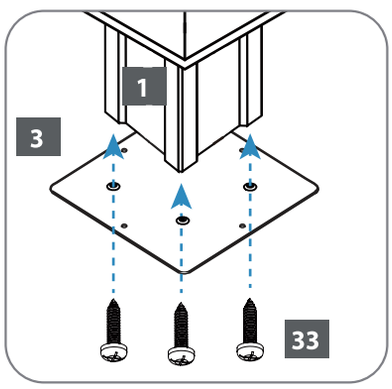

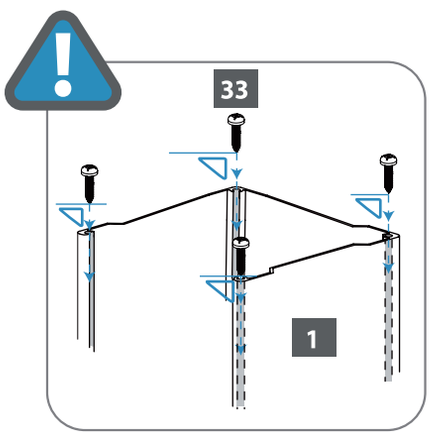

Leave support frames (2) about 10”over lower end of corner profiles (1) until step 4 (Securing the gazebo to the ground)

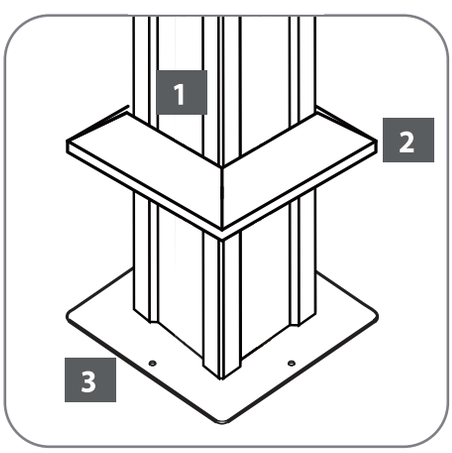

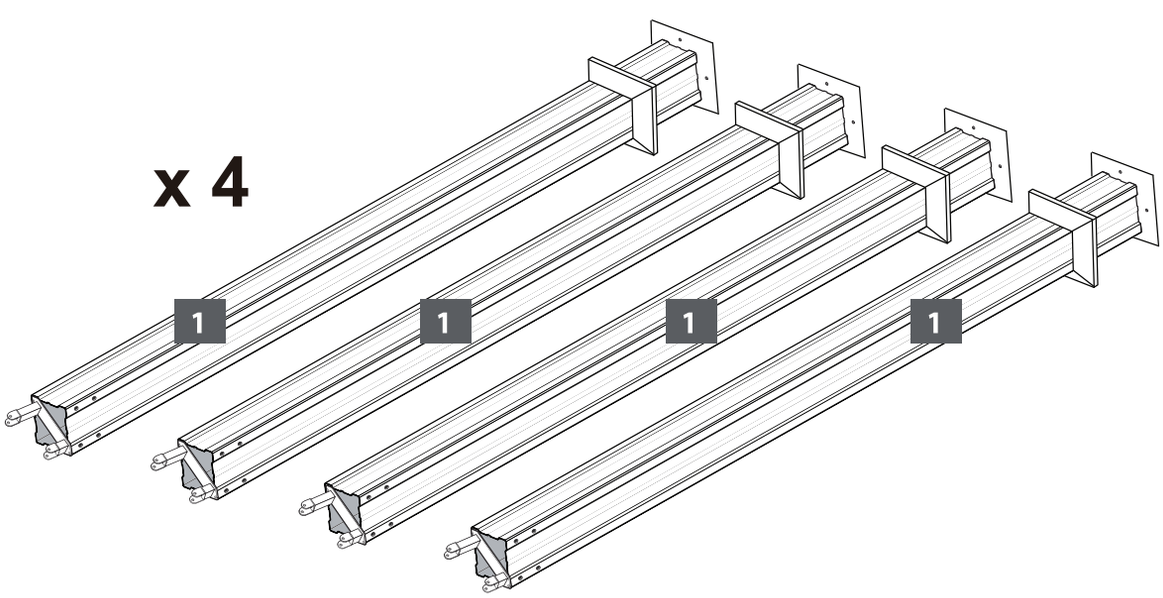

STEP 2 Assembling the Rails

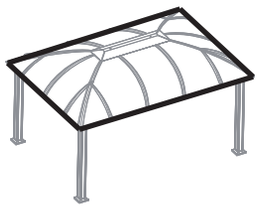

Components

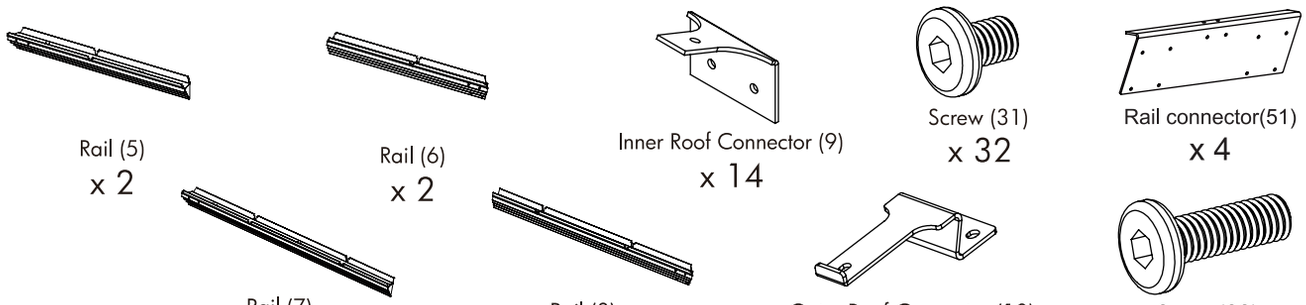

2.A Insert rail connector (51) into blunt end of long rail (5) secured with screws (31).
Insert long rail (6) secured with screw (31) as shown.
Repeat to create two sets of long rails.

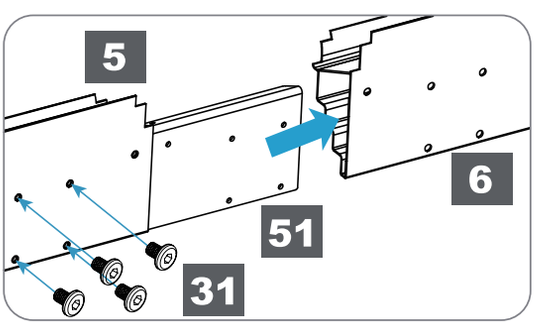

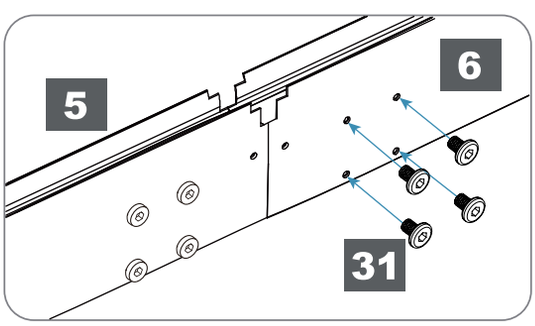

2.B Insert rail connector (51) into blunt end of long rail (7) secured with screws (31).
Insert long rail (7) into blunt end of long rail (8) secured with screws (31) as shown.
Repeat to create two sets of long rails.

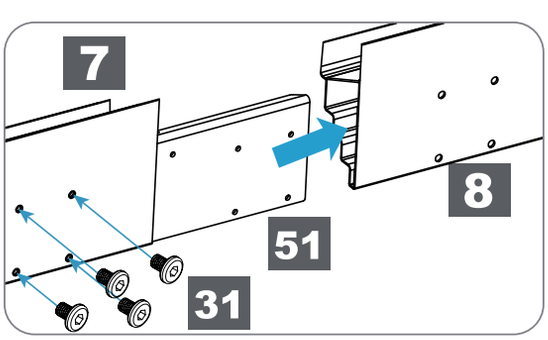

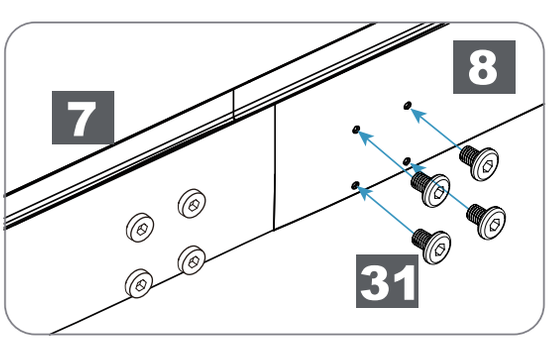

2.C

Attach four outer roof connectors (10) and three inner roof connectors (9) to each rail set at pre-drilled screw holes, using screws (32).

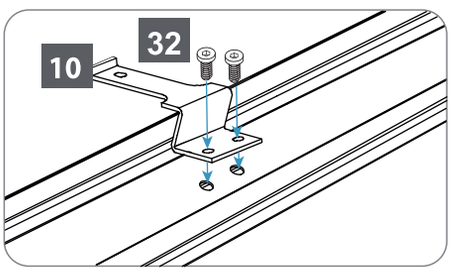

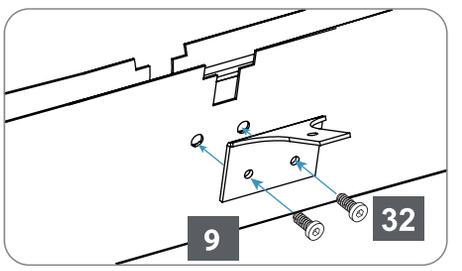

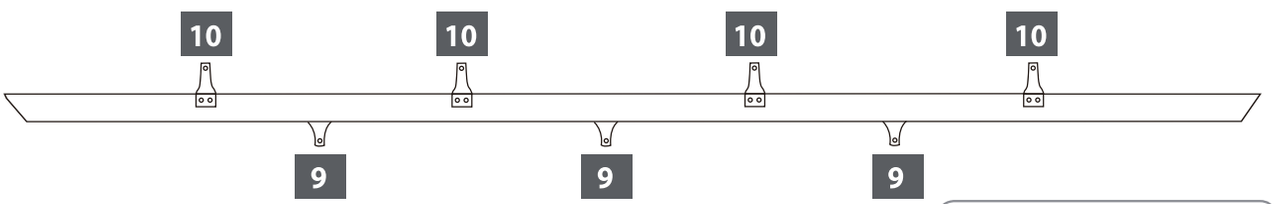

VIEW FROM THE TOP

2.D

Attach five outer roof connectors (10) and four inner roof connectors (9) to each rail set at pre-drilled screw holes, using screws (32).

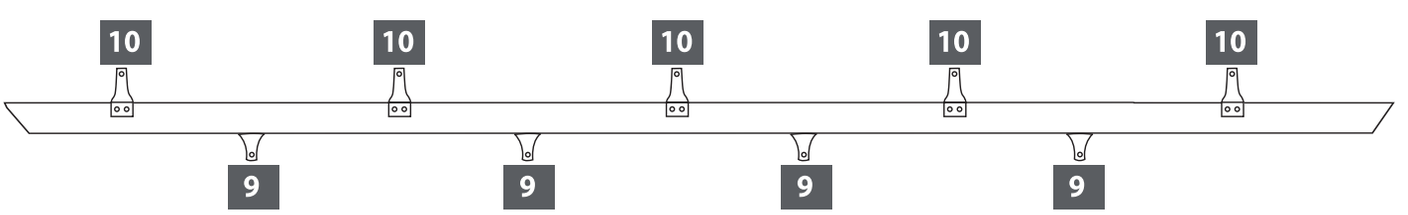

VIEW FROM THE TOP

ATTENTION: Attach roof connectors facing exactly in the directions shown.

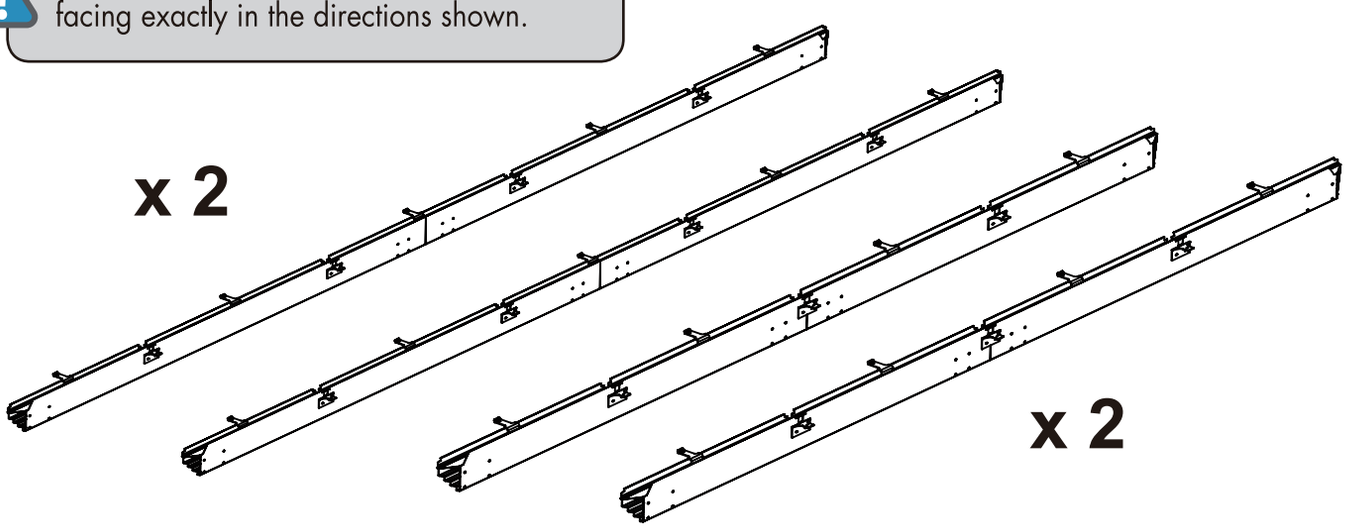

STEP 3 Attaching the Rails to the Corner Profiles

3.A Attach one roof profile set (5+6) to two corner profiles (1) as shown, using screws (32) and supplied magnetic hex key (45) through holes in profile set.

Components

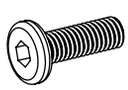

Screw (32)
x 32

Plastic Cap #3 (39)
x 32

Magnetic Hex Key (45)
x 1

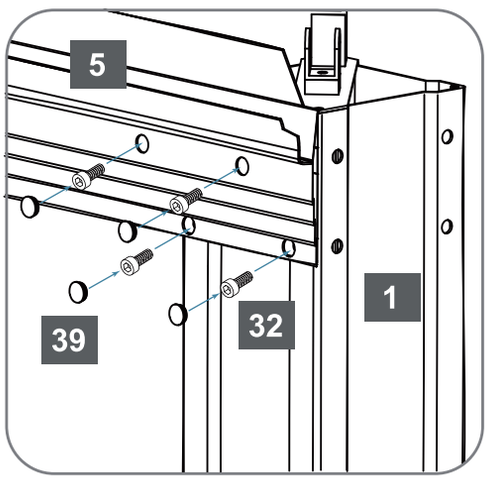

3.B Close holes in profile set with plastic caps #3 (39).

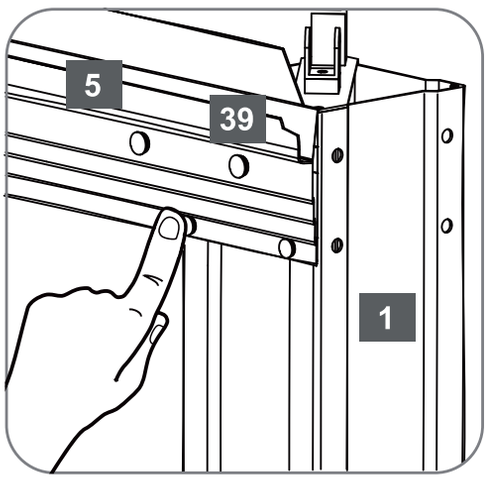

Repeat step 3.A and 3.B to create two sets.

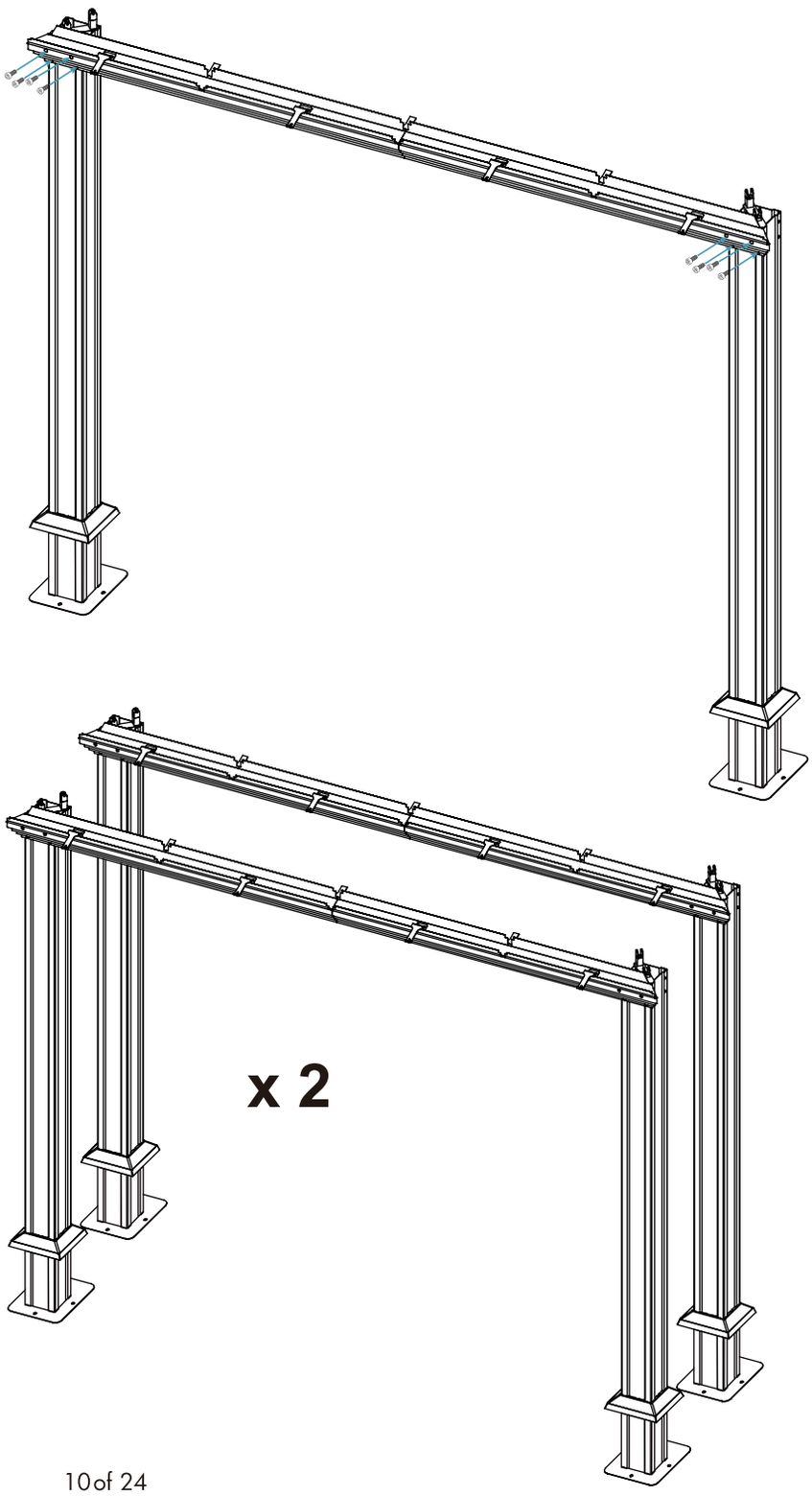

3.C

Using at least 3 people, attach the remaining two roof profile sets (5+8,6+7) to corner profiles (1), connecting all four corner profiles (1).
Fasten with four screws (32) and supplied magnetic hex key (45) on each side.
Close holes in profile sets with plastic caps #3 (39).

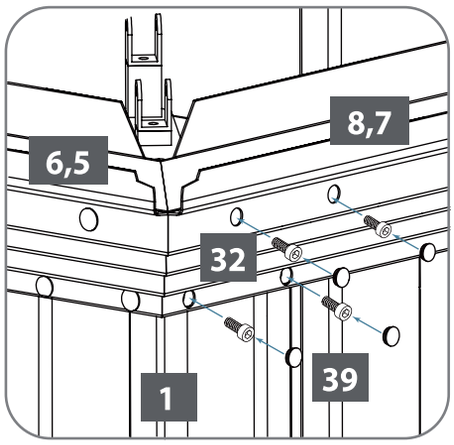

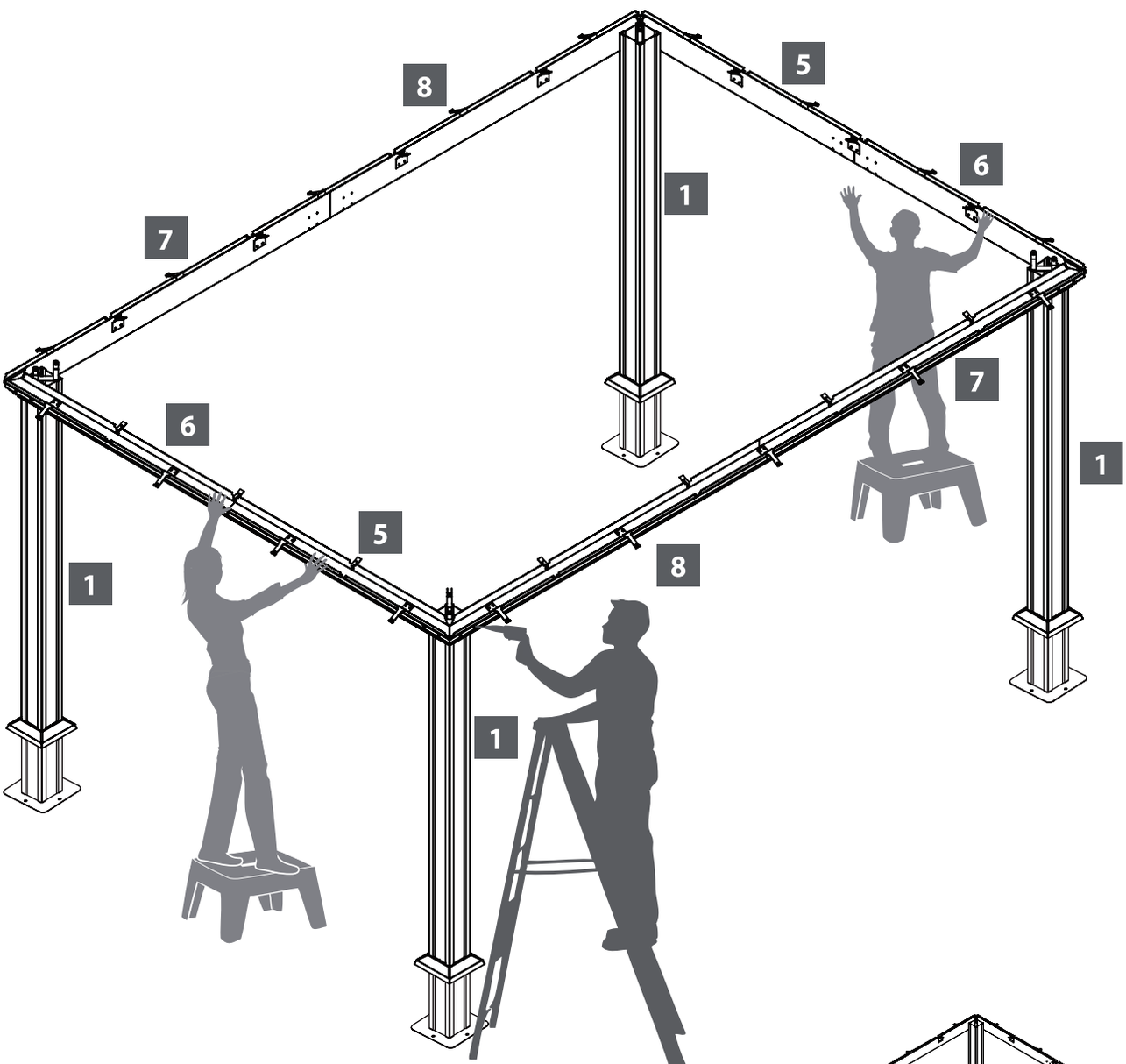

IMPORTANT: After this step you should place the gazebo frame in its desired location.
Make sure all corners are squared at 90 degrees.

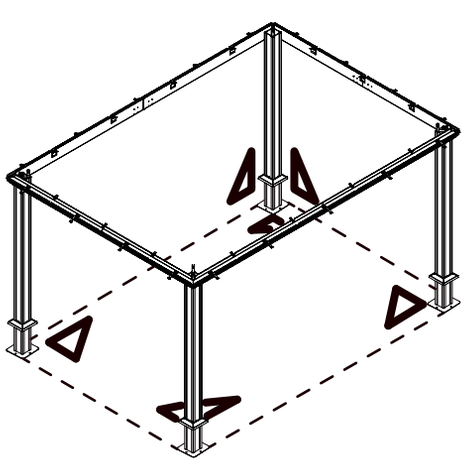

STEP 4 Securing the Gazebo to the Ground

4.A Fasten the gazebo frame to the ground, using four spikes (42) for each support plate.
Lower support frames (2) to cover support plates (3).

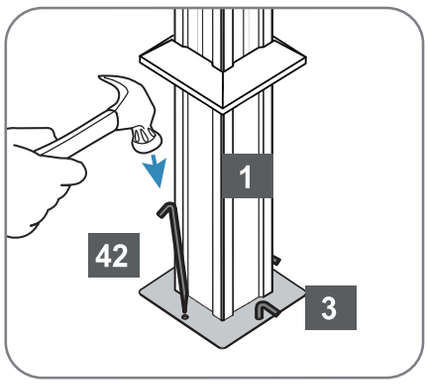

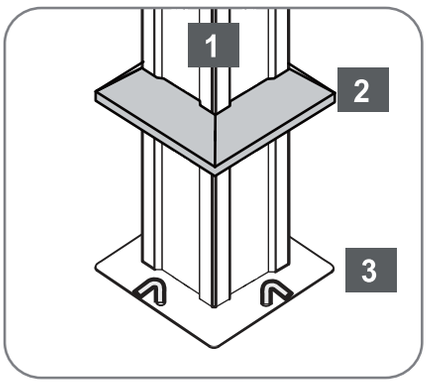

Components

Ground spike (42)
x 16

Optional Securing the Gazebo to a Concrete Floor or Wood Deck

Concrete Floor:

1.Drill holes approx. 3.00 inches deep and use a mallet to set up.
2.3/8" masonry drill bit to drill holes for the concrete anchors supplied.
3.Using a concrete drill, drill holes into the concrete floor, corresponding to the holes in support plates (3).
4.Insert concrete bolts (40) into the holes and hammer into place, using a mallet.
5.Fasten concrete bolts with washers and nuts.

Components

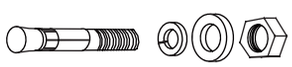

Concrete bolts, washers and nuts (40)
x 24

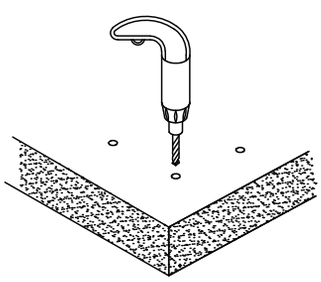

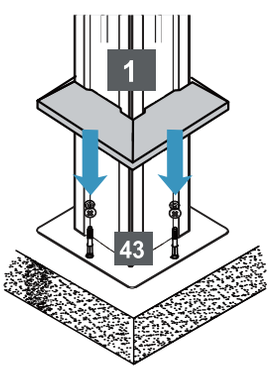

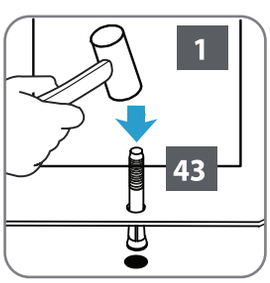

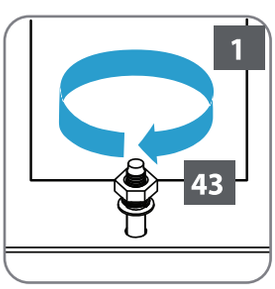

Wood Deck:

1.Using an electric wood drill, drill holes into the wood floor, corresponding to the holes in support plates(2).
corresponding to the holes in support plates (3).
2.Insert wood screws with washers(not supplied) into the holes and fasten, using an electric screw driver.

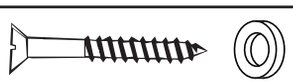

Wood Bolts, washers x 24
NOT SUPPLIED
to be purchased by user

NOTE: After securing the gazebo to the ground, we highly recommend filling the corner profiles (1) with 2 bags (20LBs each) of Pea Gravel each for extra stability, as shown.

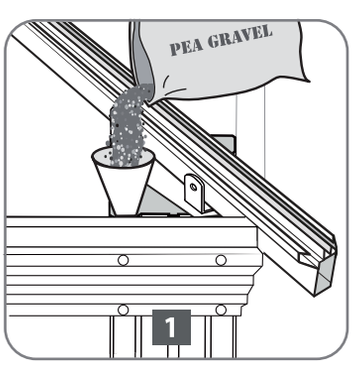

STEP 5 Installing the Lower Roof Gable Profiles

ATTENTION:
DO NOT ATTEMPT TO ASSEMBLE THIS ALONE !

Components

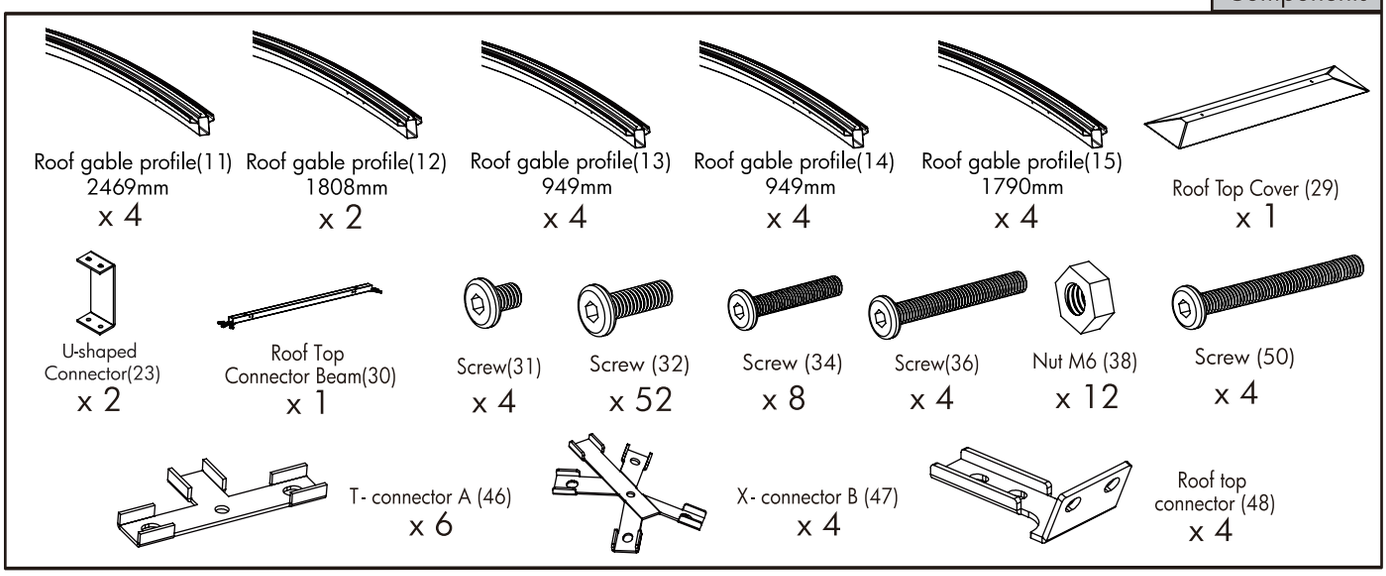

Using at least three people, install the roof gables (11,12) in the following order:

ATTENTION:
Roof Profiles, roof panel sand gables must be aligned properly during assembly to minimize any possibility of leaking.

VIEW FROM BELOW
(from inside gazebo)

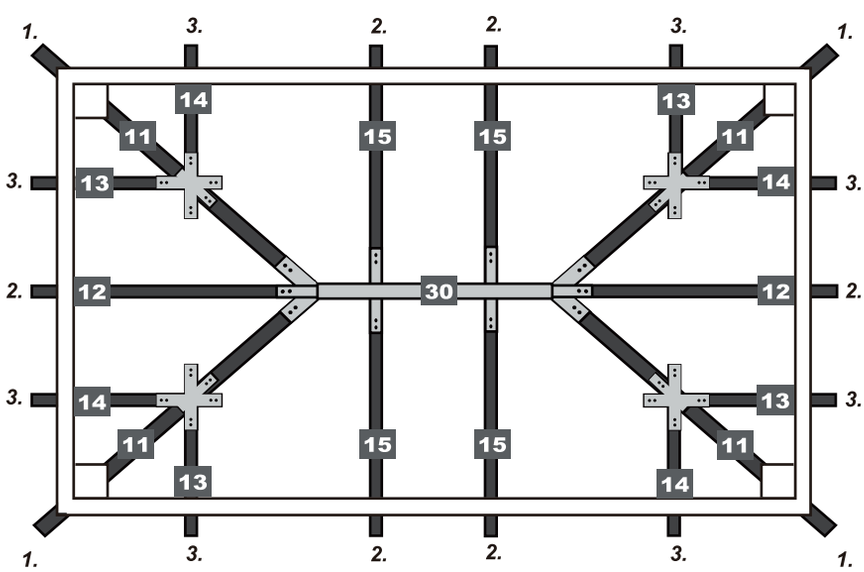

IMPORTANT: Make sure that the roof gable profiles (11,12) are installed exactly as shown so that the pre-drilled screw holes will align properly with screw holes on the roof panels.

BOTTOM VIEW OF PROFILES

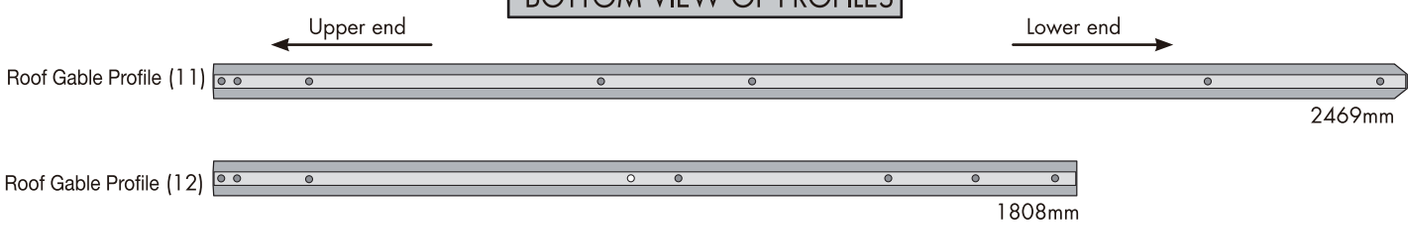

5.A

Using screws (34) and nuts (38), connect roof gable profiles (9) to roof connectors (4) on top of corner profiles (1).

Using screws (32), connect roof gable profile (11) to roof top connector beam (30) as shown.

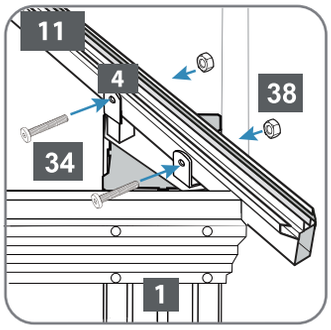

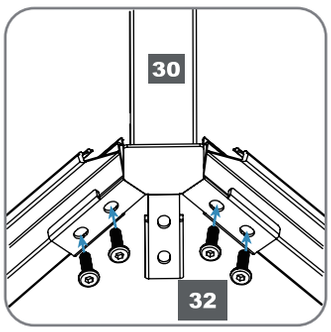

VIEW FROM BELOW

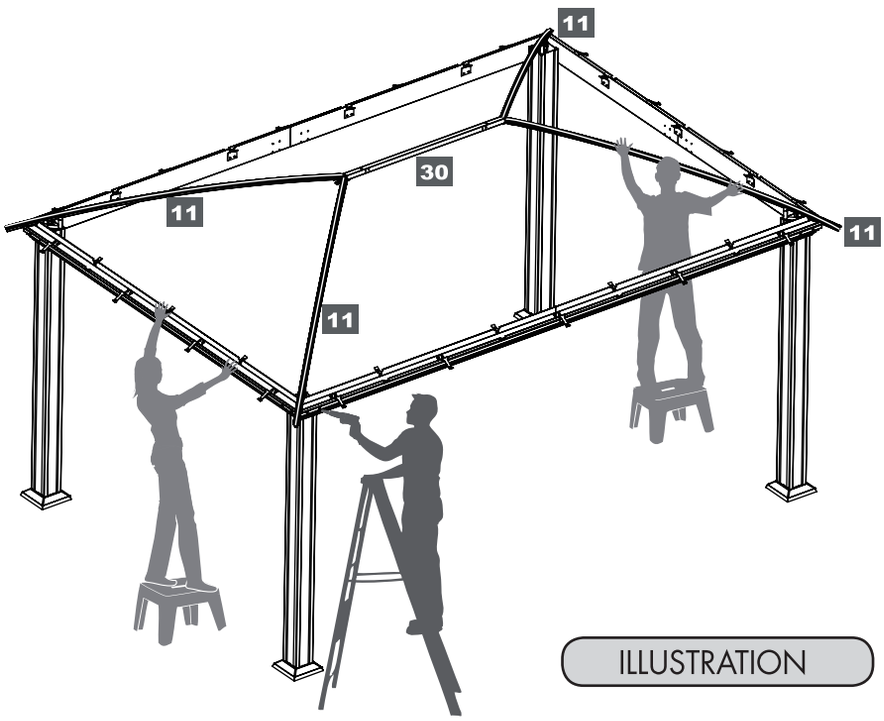

ILLUSTRATION

5.B

Install roof gable profiles (15).
Using screws (50) nuts (38) connect top center connector (48) to top connector beam (30).
Using screws (32) connect profiles (15) to inner roof connector (9) on long roof profiles sets (7,8) and the other end to roof top center connector (48).

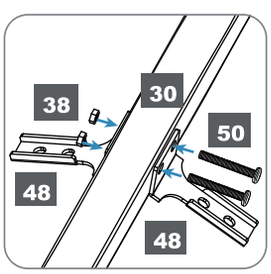

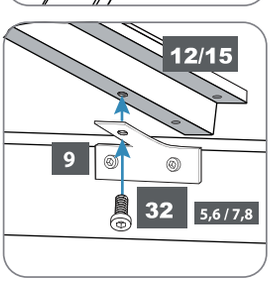

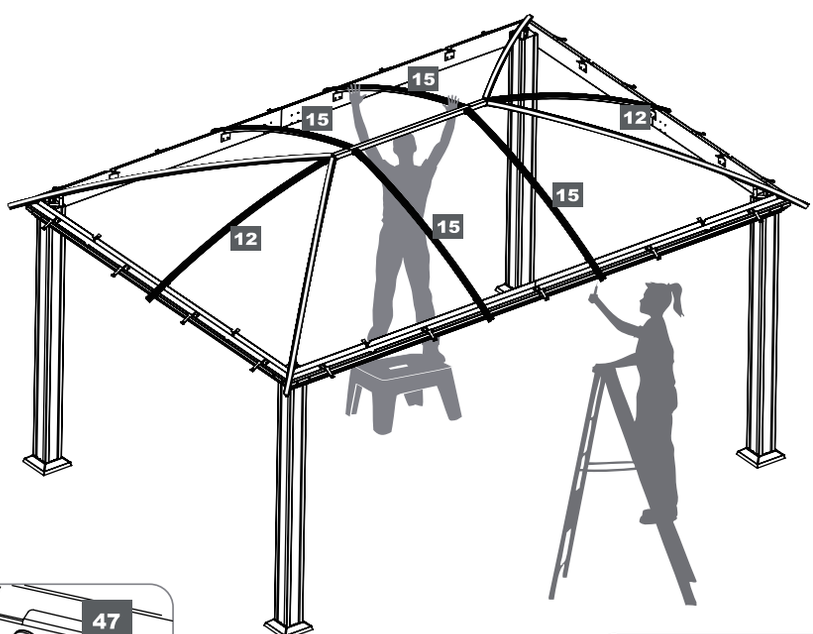

ILLUSTRATION

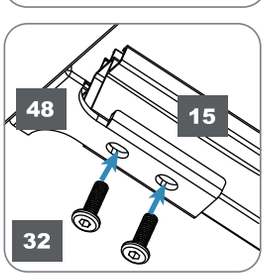

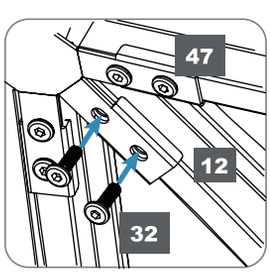

Using screws (32) connect profiles (12) to inner roof commector (9) on short roof profiles sets (5,6) and the other end to top connector beam (30).

VIEWS FROM BELOW

5.C

Connect the roof top cover (29) to the roof top connector beam (30) as shown.
First connect the two U-shaped connectors (23) to the roof top cover (29), using four screws (31).
Then attach U-shaped connectors (23) to roof top connector beam (30) from below, using four screws (36).

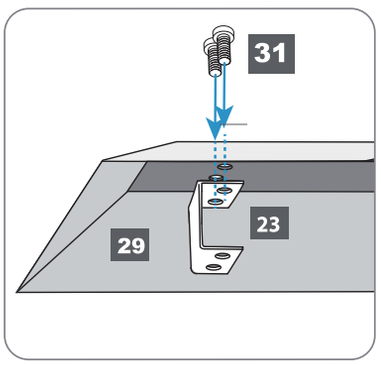

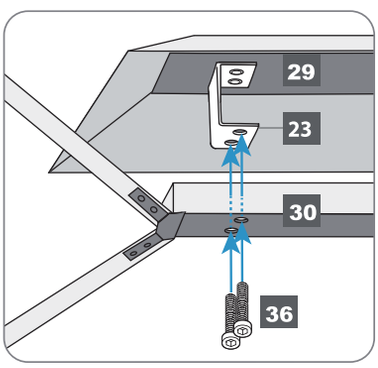

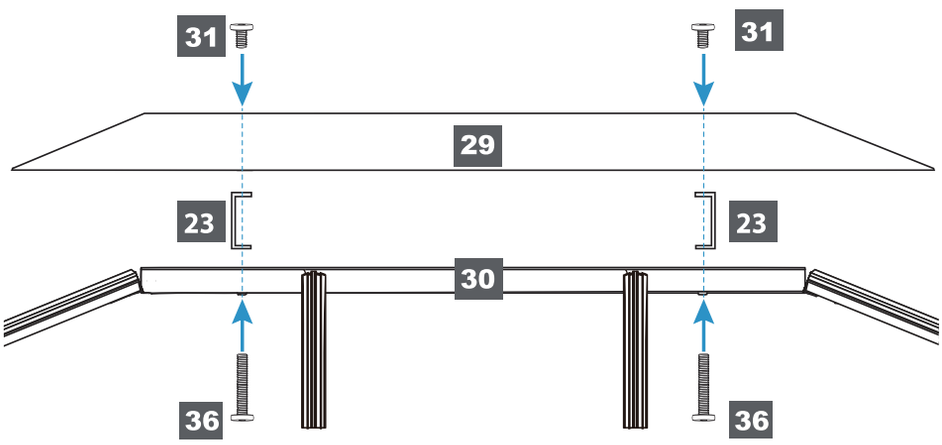

VIEWS FROM BELOW

5.D

Attach T-connectors (46) to underside of roof gable profiles (12,15), using screws (32) as shown.
Attach X-connectors (47) to underside of roof gable profiles (11), using screws (32) as shown.
Connect profile (13,14) to X-connectors (47) and the other end to T-connector (9) using screws (32).

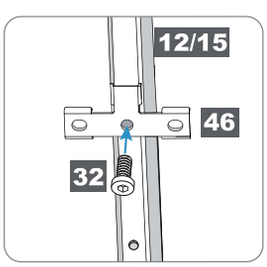

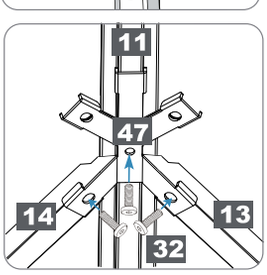

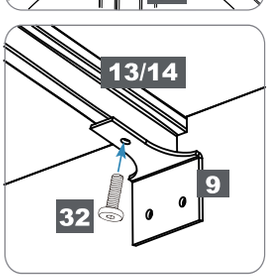

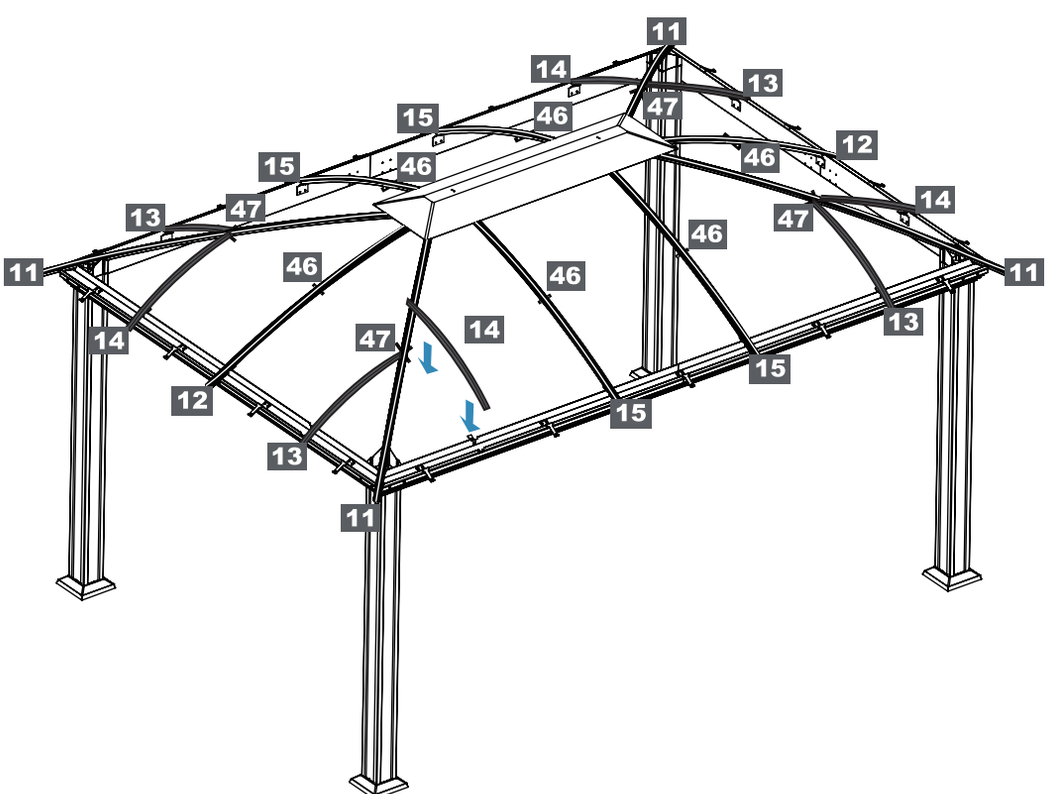

VIEWS FROM BELOW

STEP 6 Installing the Horizontal Roof Profiles

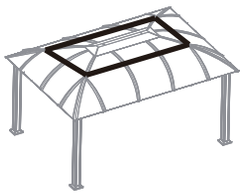

Components

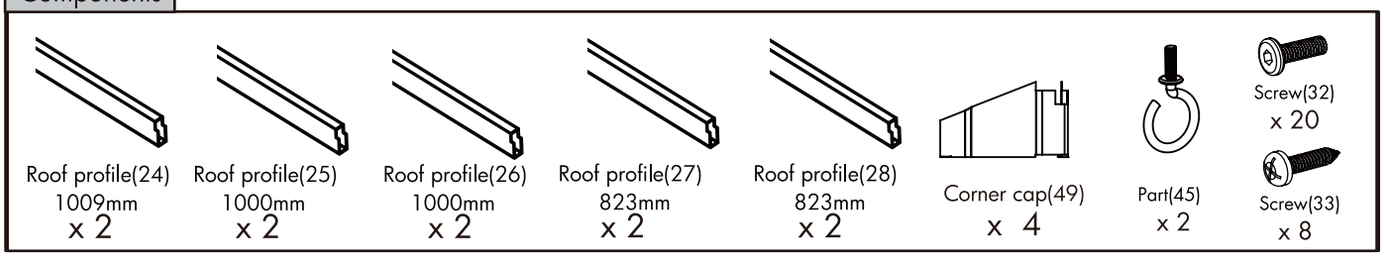

6.A

Attach roof gable profiles (24,25,26,27,28) to T-connectors A (46) and X-connectors B (47).

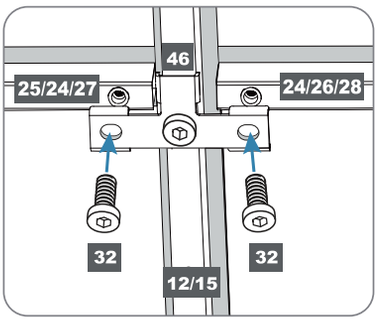

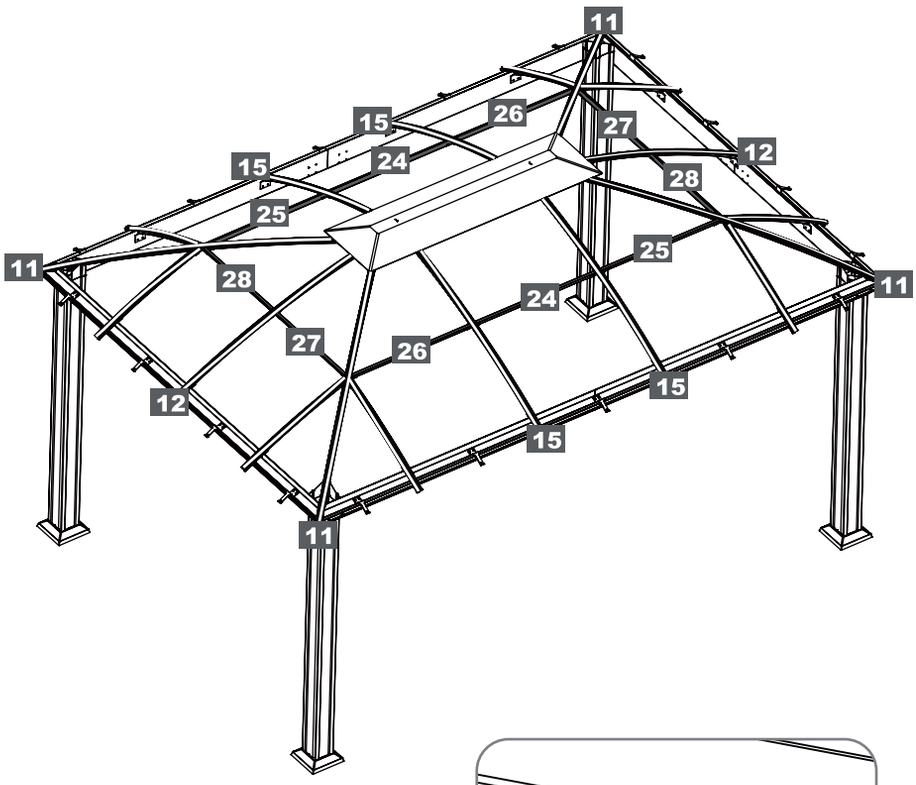

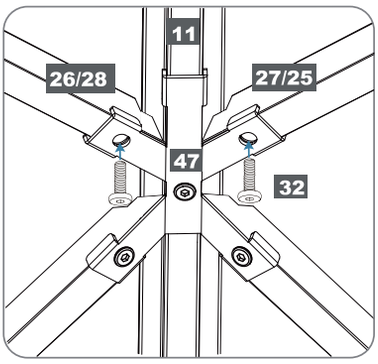

VIEWS FROM BELOW

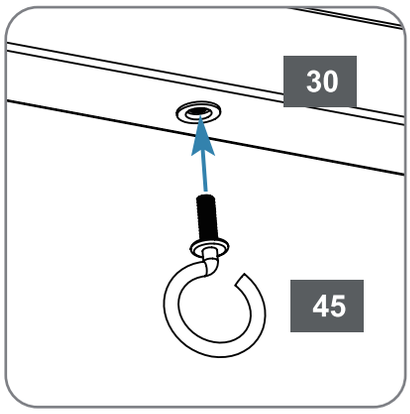

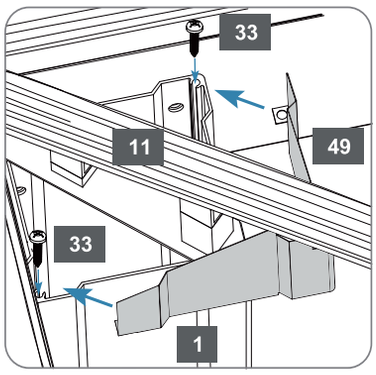

VIEW FROM INSIDE

Fasten corner cap (49) to the top of the corner profile (1) frominside, and using screws (33).

STEP 7 Installing the Roof Panels and Upper Roof Profiles

IMPORTANT: Gently cut on the edge of the panels on both side with knife and remove protective plastic of roof panels. Place with black surface toward the sun facing out when installing.

Components

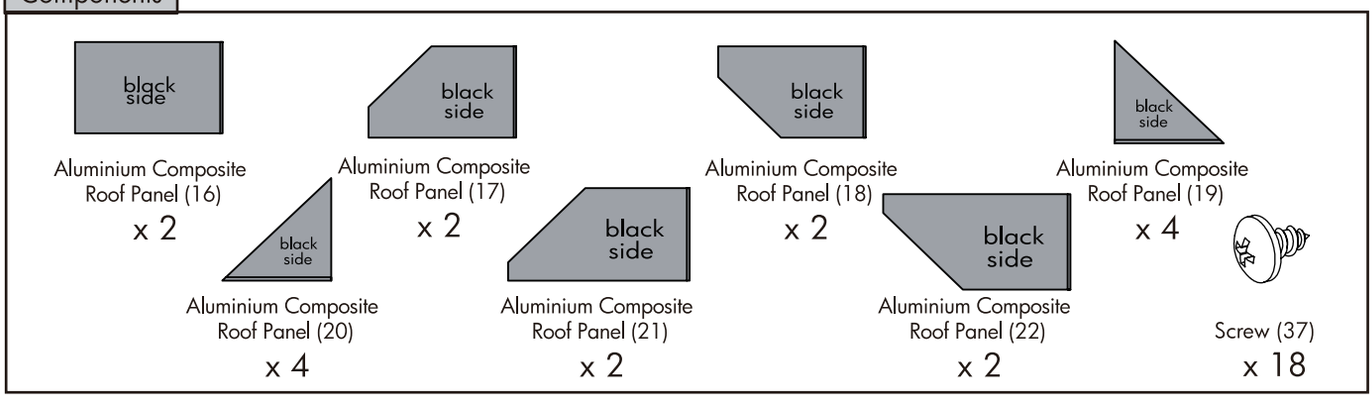

7.A

IMPORTANT: Gently cut the film in order to avoid breaking on the panels.

We recommend curving the roof panels SLIGHTLY as shown below, to facilitate fitting them onto the curved roof profiles.

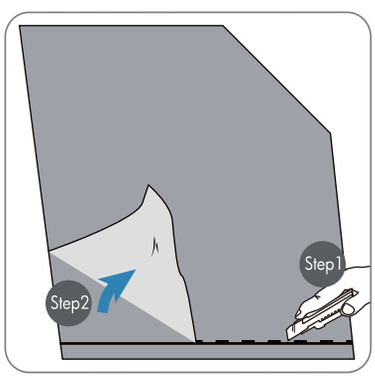

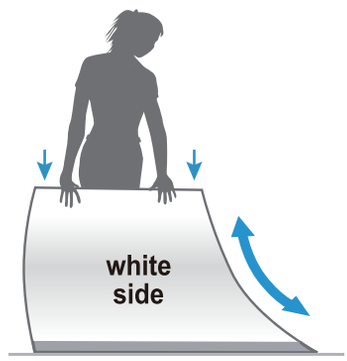

Fit roof panel (17) on top of roof profiles (13,15) as shown and fasten with one screw (37) from below to outer roof connector (10).

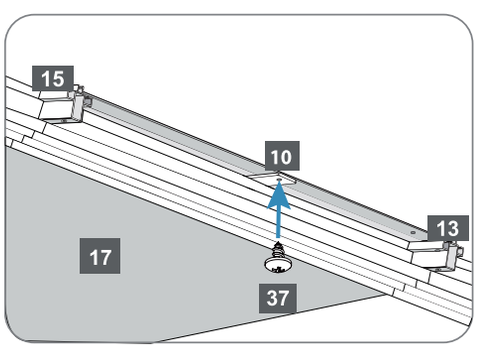

VIEW FROM BELOW

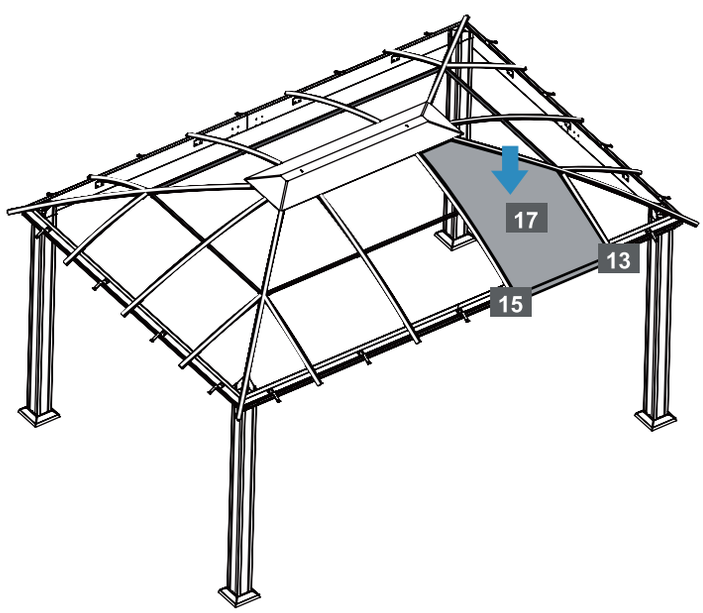

7.B

Fit roof panel (16) on top of roof profiles (15) as shown and fasten with one screw (37) to outer roof connector (10).

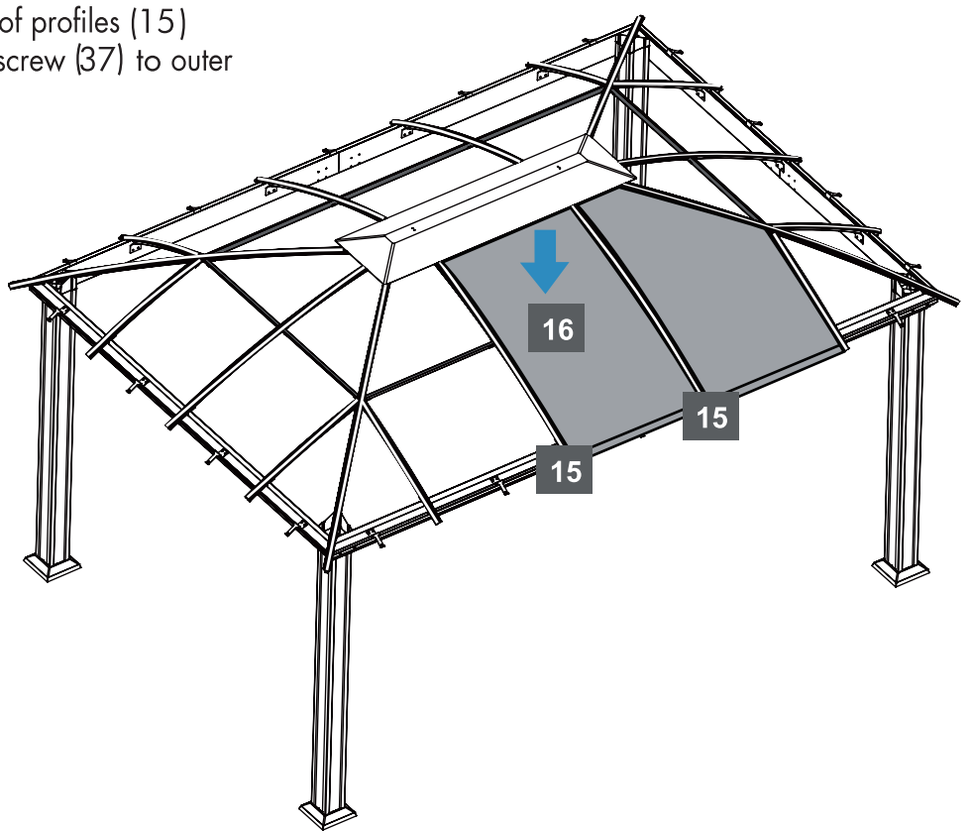

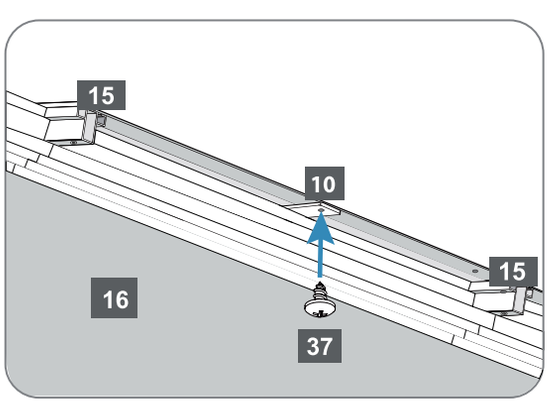

VIEW FROM BELOW

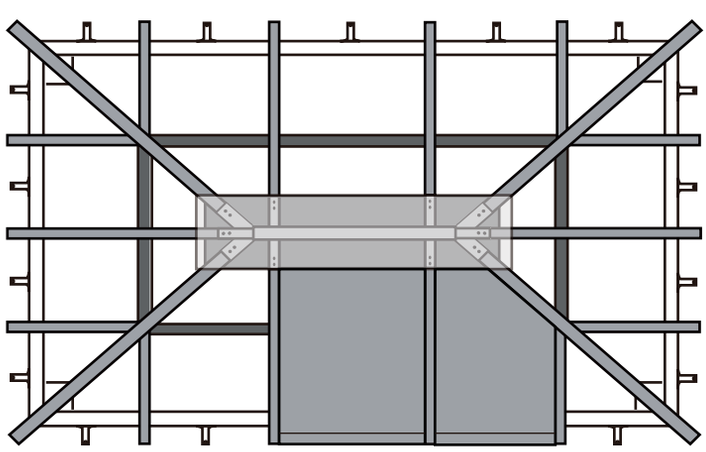

VIEW FROM TOP

IMPORTANT: Make sure that the roof panels are installed exactly in the order shown, otherwise it will be difficult to place the top roof gable profiles.

Components

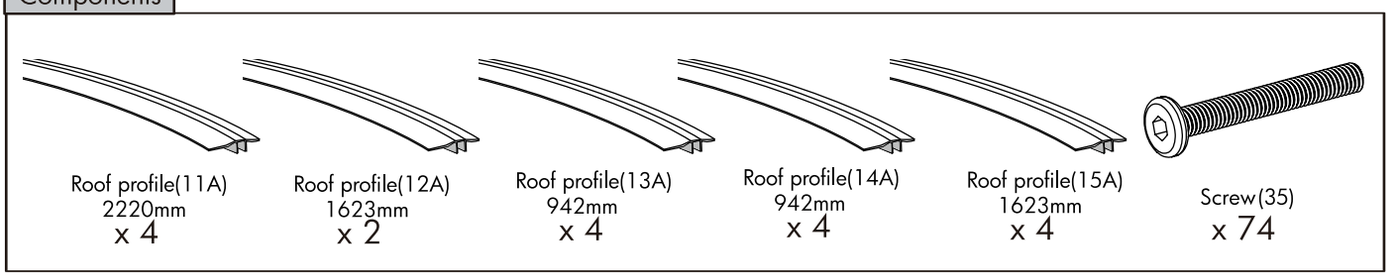

7.C

Place roof profile (15A) on top of roof profile (15) as shown and fasten with screws (35) from below (inside gazebo).

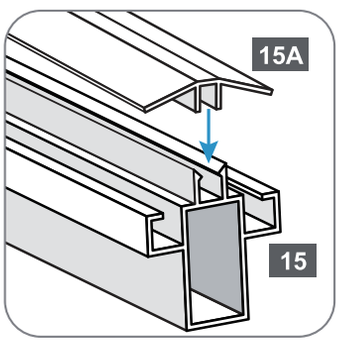

Connecting the upper and lower profiles

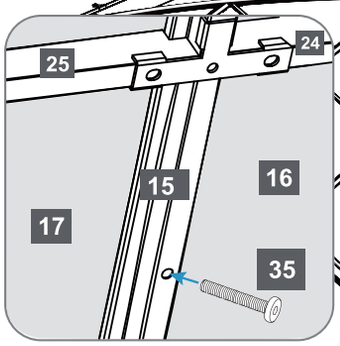

VIEW FROM BELOW
(from inside gazebo)

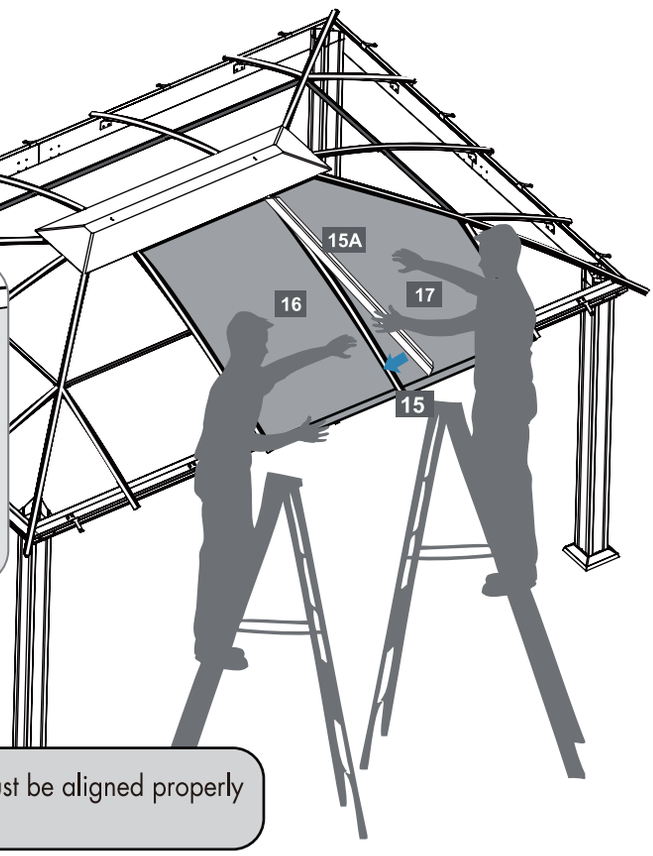

ATTENTION: Roof Profiles, roof panels and gables must be aligned properly during assembly to minimize any possibility of leaking.

7.D

Fit roof panel (18) on top of roof profiles (14,15) as shown and fasten with screws (37) to outer roof connector (10) from below.

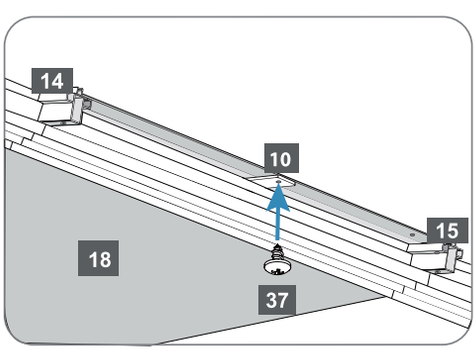

VIEW FROM BELOW

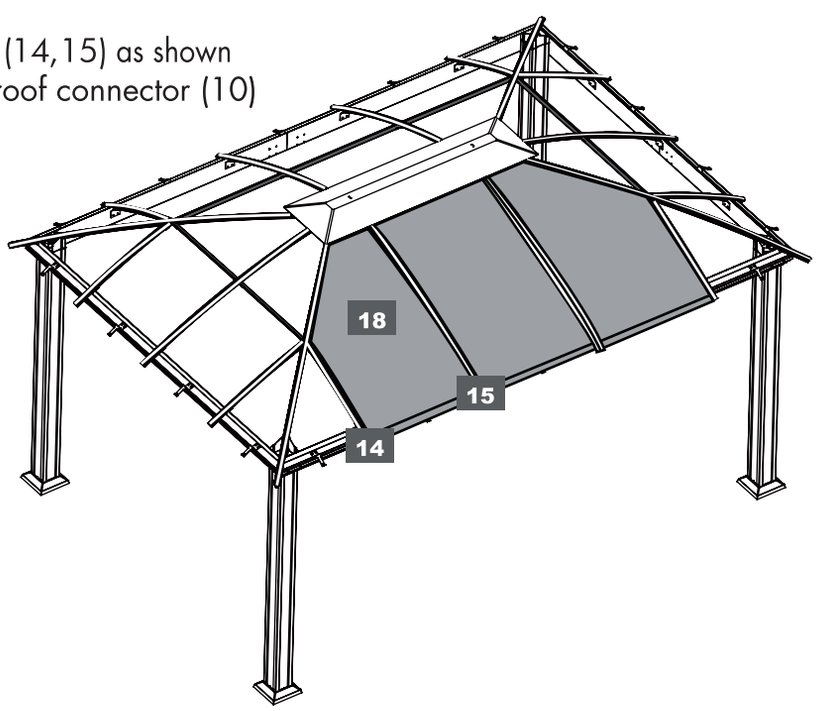

7.E

Place roof profile (15A) on top of roof profile (15) as shown. Align both profiles, and fasten with two screws (35) from below(inside gazebo).

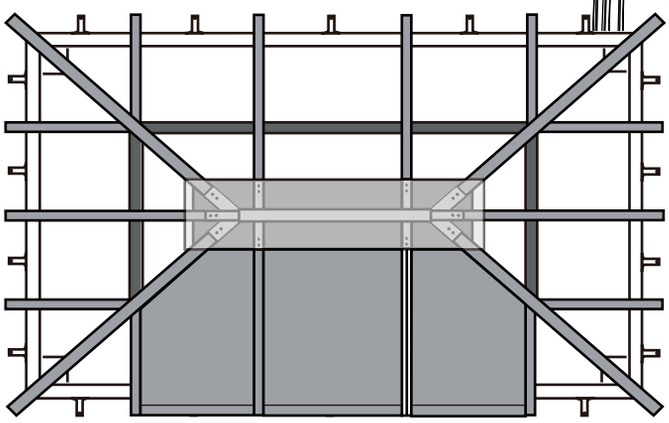

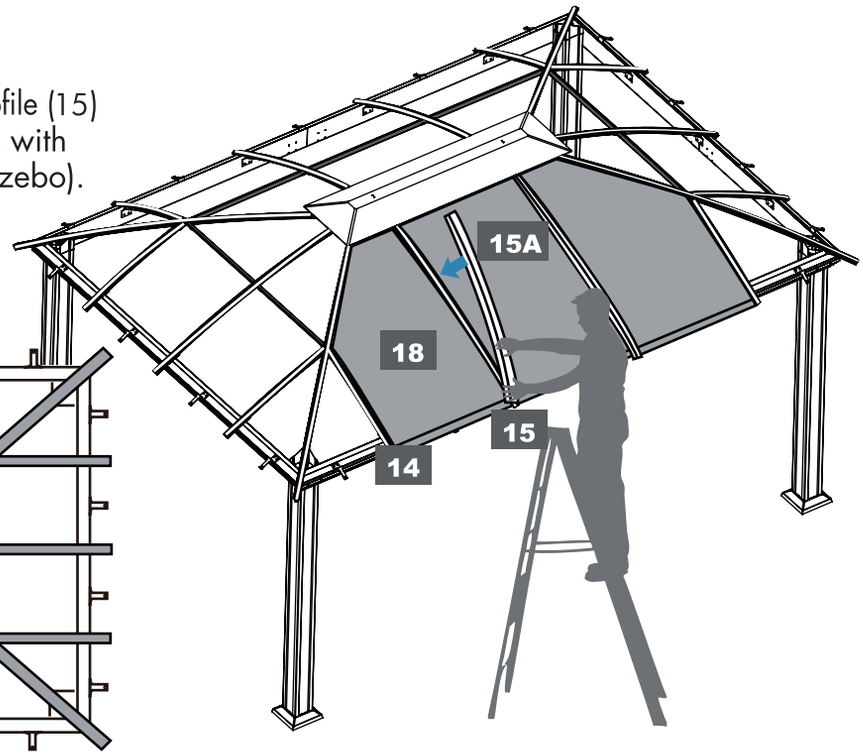

7.F

Fit roof panel (19,20,21,22) on top of roof profiles (11,12,13,14) as shown and fasten with one screw (37) to outer roof connector (10).
Place roof profiles (11A) on top on roof profiles (11) and fasten with screws (35) from below.

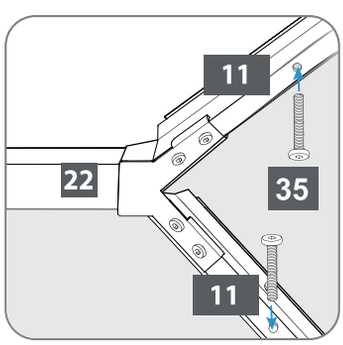

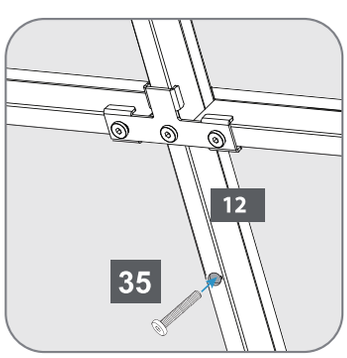

VIEW FROM BELOW

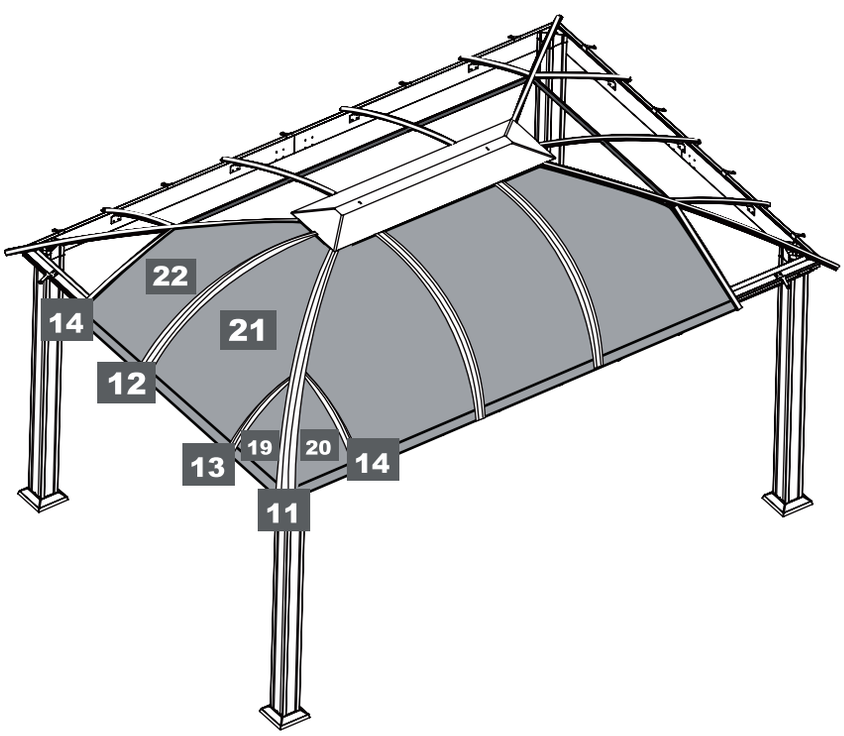

7.G

- Positions of screws (35) from below roof

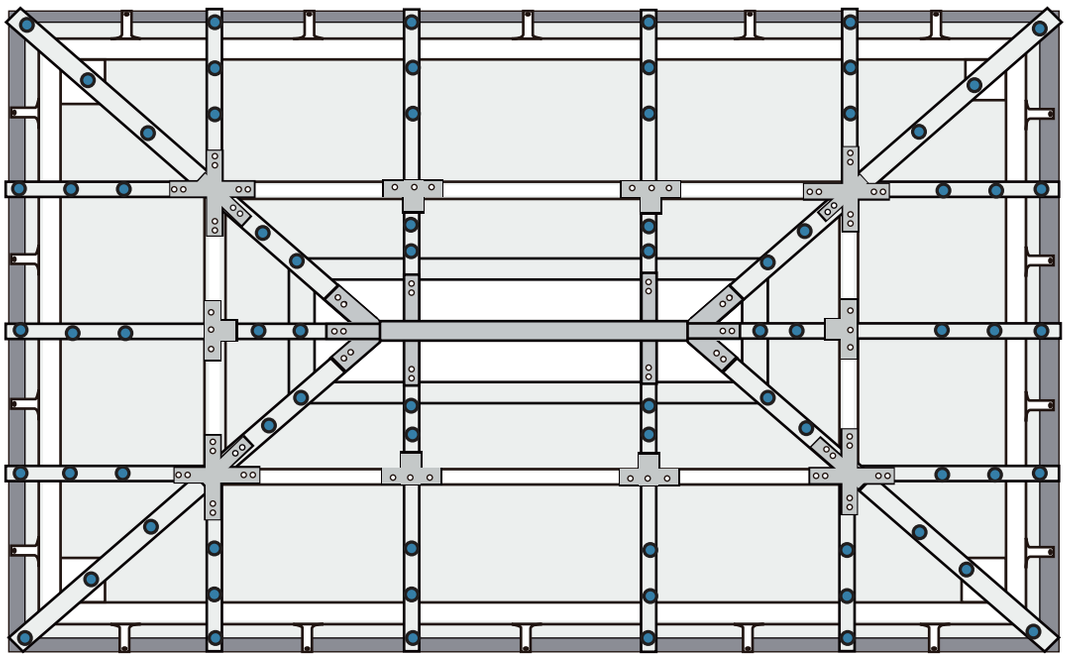

VIEW FROM BELOW
(from inside gazebo)

7.H

Continue in a clock-wise direction as shown.

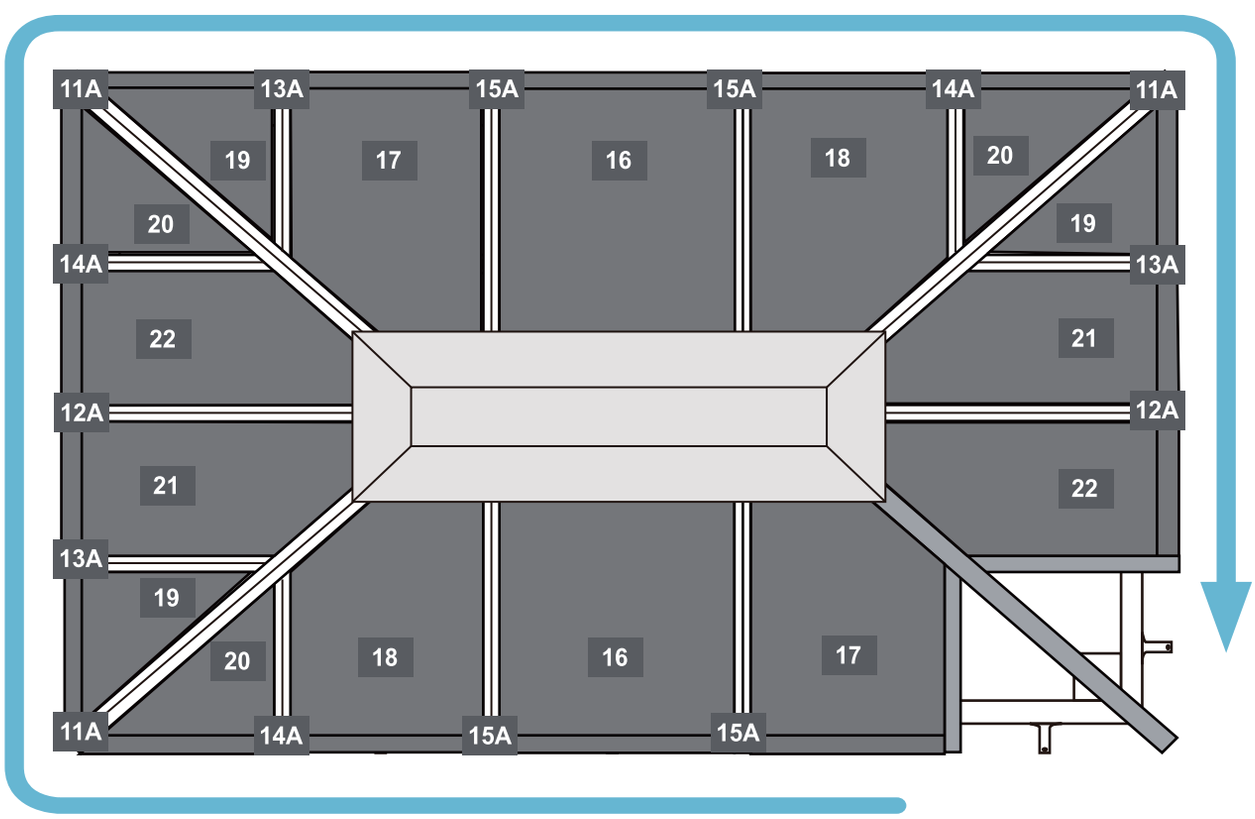

VIEW FROM TOP

7.I

Place the roof panel (19,20) on top of profiles (11,13,14) , fasten with screw (37) from below.
Place the roof gable profile (11A) on top of (11) , fasten with screw (35) from below of (11).

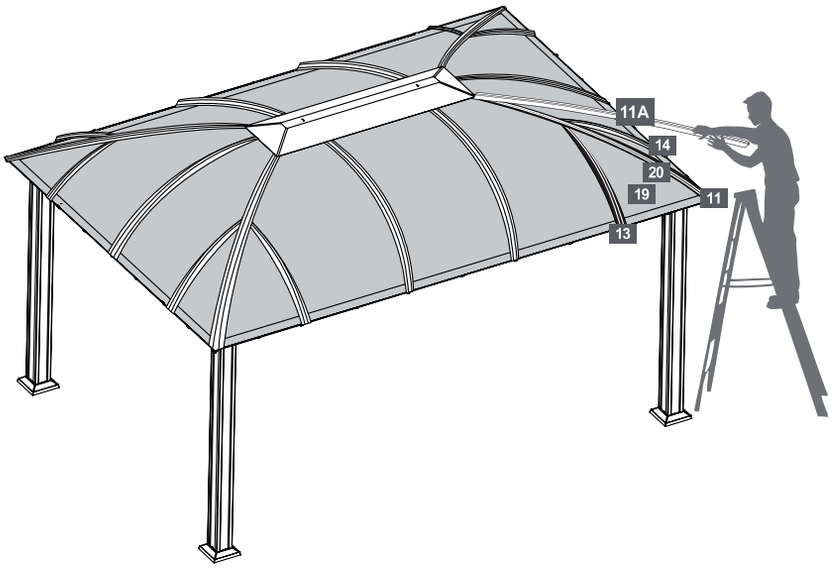

7.J

Place the roof gable profile (13A) on top of (13), fasten with screw (35) from below of (13).

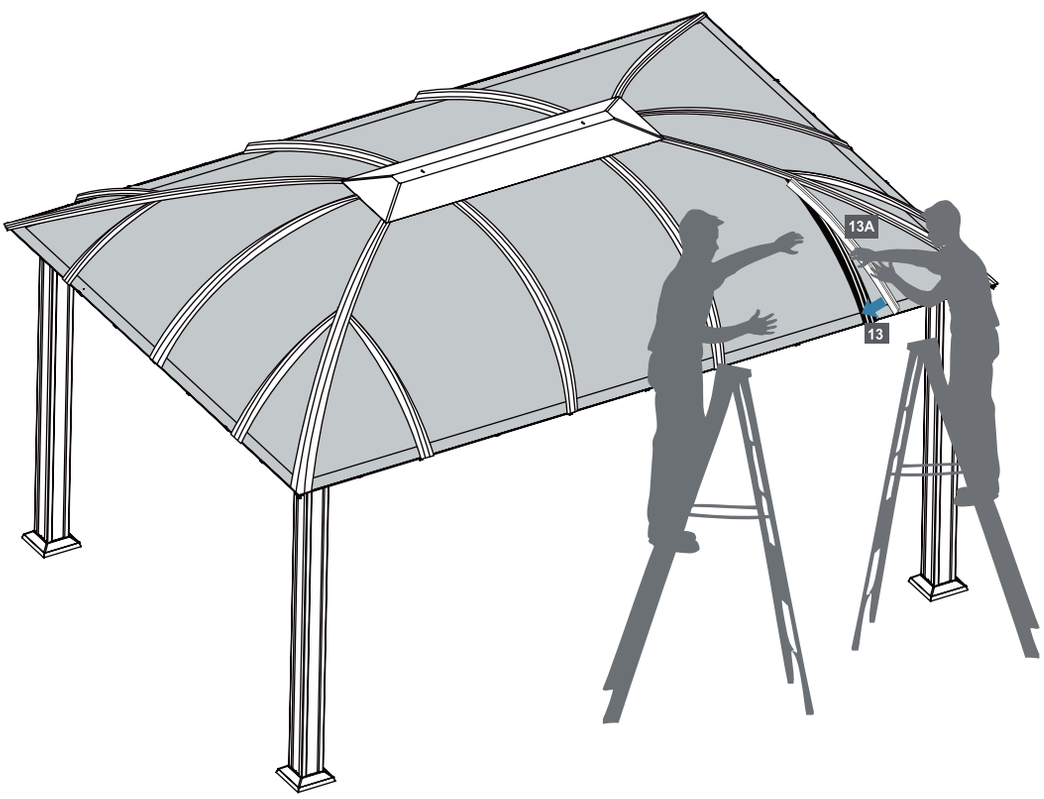

STEP 8 Installing the Plastic Caps

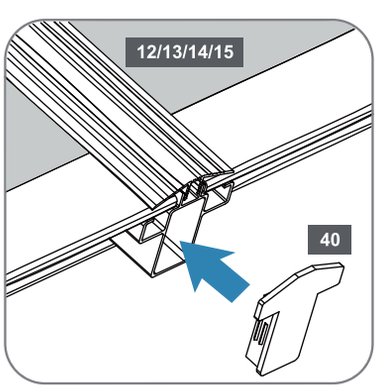

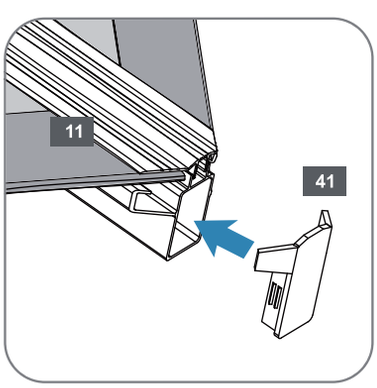

Components

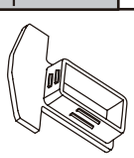

Plastic Cap #1 (40)
x 14

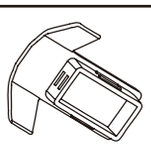

Plastic Cap #2 (41)
x 4

Close off roof profiles (12/13/14/15) with plastic caps #1(40) and roof profiles (11) with plastic caps #2 (41).

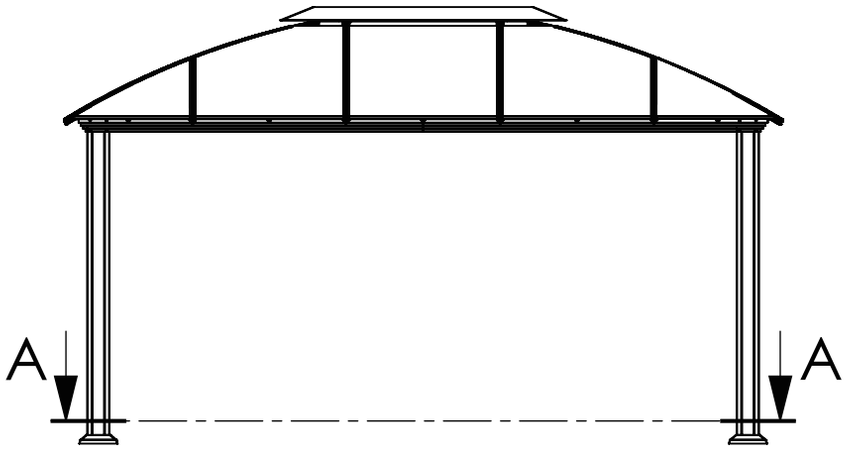
A
A

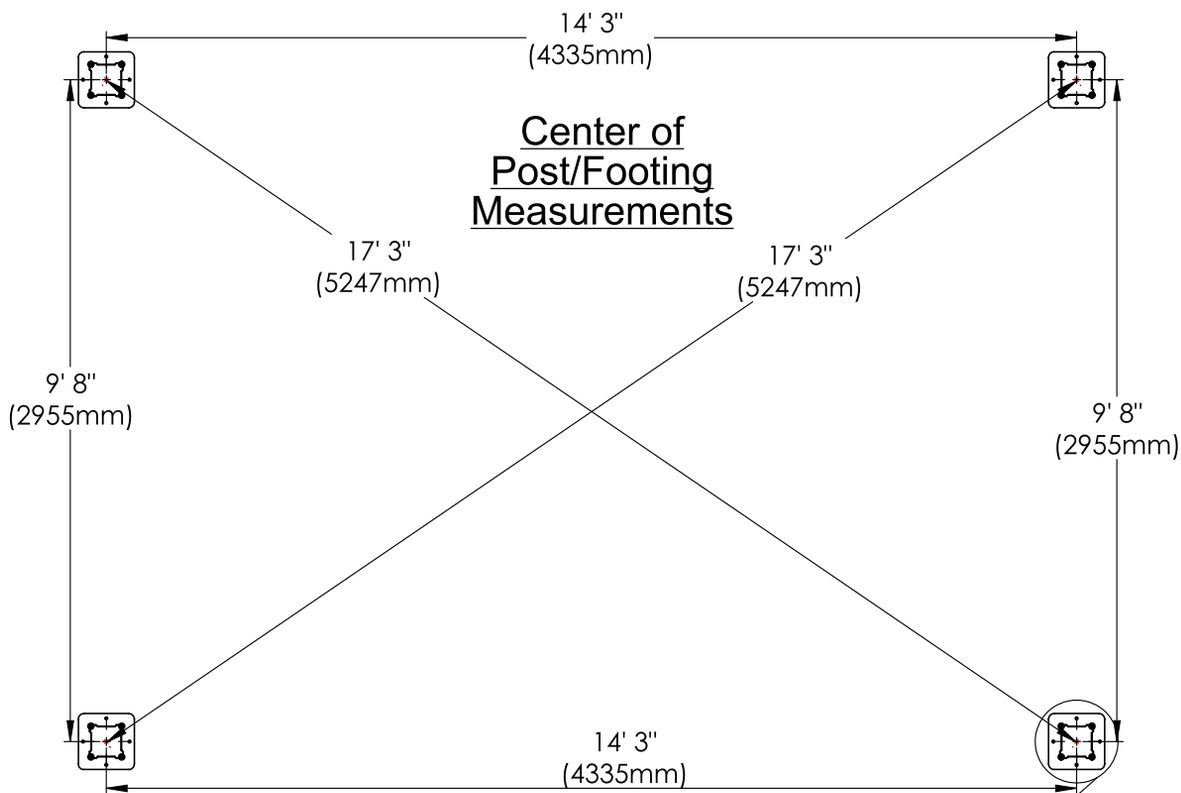
14' 3"
(4335mm)
Center of
Post/Footing
Measurements
17' 3"
(5247mm)
17' 3"
(5247mm)
9' 8"
(2955mm)
9' 8"
(2955mm)
14' 3"
(4335mm)

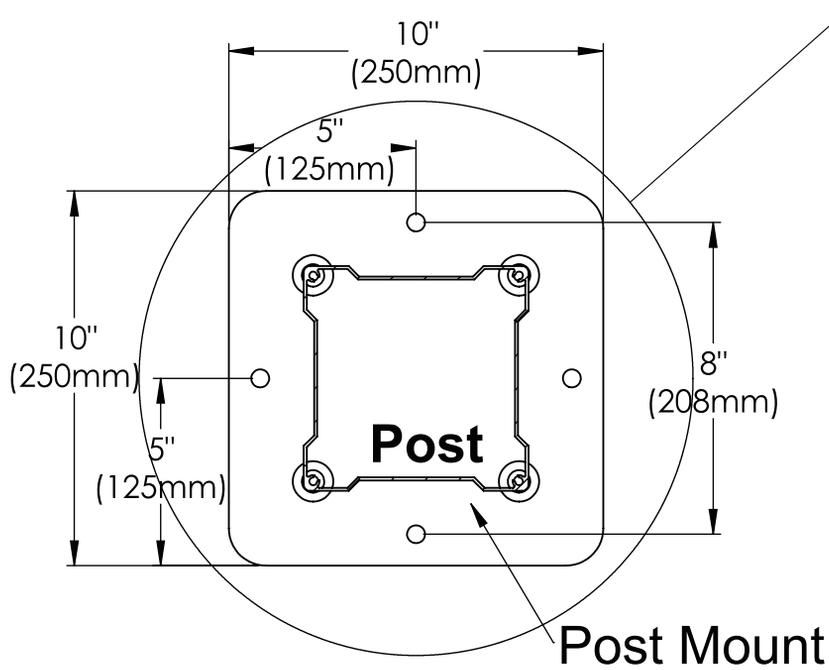
10"
(250mm)
5"
(125mm)
10"
(250mm)
5"
(125mm)
8"
(208mm)
Post
Post Mount

Post Detail

Gazebo GZH4-1216BK

Aluminium Composite Roof Panels
Assembly Instructions

WARRANTY:
Warranty covers damage due to manufacturing defects only for a period of 5 years on the structure, and 5 years on the Aluminum Shell from date of purchase. Warranty does not cover weather inflicted damage and/or damages causes caused by not following assembly instructions and adhering to warnings in manual. Warranty does not cover user error, negligence, or misuse.

ATTENTION: Roof profiles,roof panels and gables must be aligned properly during assembly to minimize any possibility of leaking.

⚠ **WARNING**: Cancer and Reproductive Harm - www.P65Warnings.ca.gov.

⚠ **AVERTISSEMENT**: Cancer et Troubles de l'appareil reproducteur - www.P65Warnings.ca.gov.

⚠ **ADVERTENCIA**: Cáncer y Daño Reproductivo - www.P65Warnings.ca.gov.

Paragon Outdoor
WWW.PARAGON-OUTDOOR.COM
@paragonoutdoorcompany

Paragon Group USA

Customer Service:(877) 782 4482 Email:cs-outdoors@paragongroupusa.com