SOJAG

Sojag code : 445-9169416
CUP/UPC code : 772830169416
Costco code: 658494

QUESTIONS? 1899-9900
costco@shelterlogic.com

Assembly Manual / Guide d'assemblage / Manual de ensamblaje / 조립설명서 / Montageanleitung

IMPORTANT, RETAIN FOR FUTURE REFERENCE: READ CAREFULLY
IMPORTANT : CONSERVER POUR RÉFÉRENCE FUTURE ET LIRE ATTENTIVEMENT
IMPORTANTE : CONSERVE PARA REFERENCIA FUTURA. LEA CUIDADOSAMENTE ANTES
Wichtig: für den zukünftigen Gebrauch aufbewahren: sorgfältig lesen.
중요: 주의 깊게 읽고 나중에 참조할 수 있도록 보관하십시오

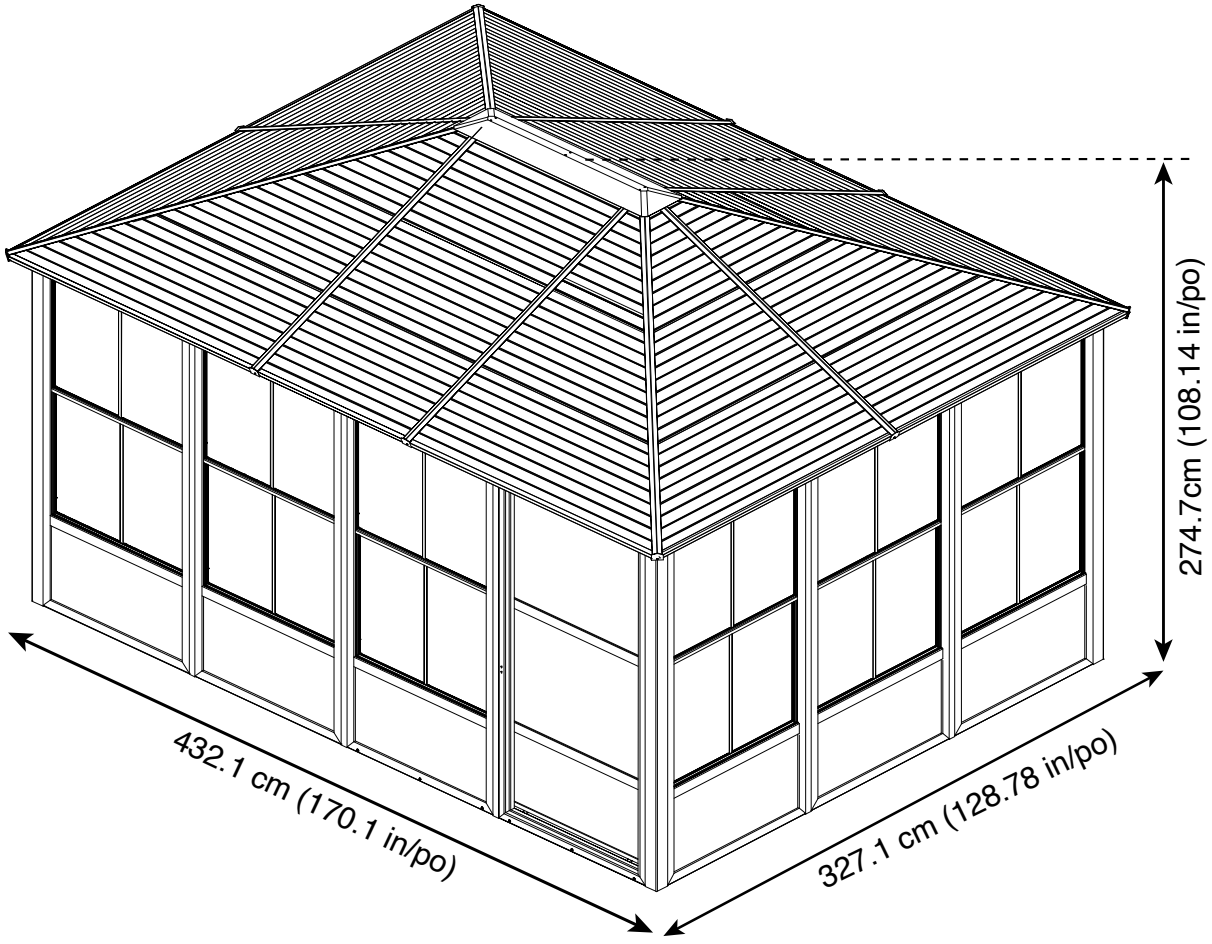

For Outdoor Use only. Not for Commercial Use.
Pour usage extérieur seulement. Pas pour usage commercial.
Solo para uso en exteriores. No para uso comercial.
Nur für den Gebrauch im Freien. Nicht für den kommerziellen Gebrauch geeignet.
이 제품은 옥외용이며 상업용이 아닙니다.

Suggested assembly method / Méthode d'installation suggérée / Método sugerido de montaje / 제안된 조립 방법/ Vorgeschlagene Montagemethode

Use the hex keys in the box. / Utilisez les clés hexagonales fournies dans la boite. / Utilice las llaves hexagonales en la caja. / 상자에 육각 키를 사용 하십시오. / Verwenden Sie die Sechskantschlüssel in der Box.

Please use a Phillips screwdriver. / Utilisez un tournevis de type Phillips / Por favor, use un destornillador Phillips. / 십자 드라이버를 사용 하십시오 . / Bitte verwenden Sie einen Kreuzschraubenzieher.

You may need to use a drill for this step. / Vous pouvez avoir besoin d'utiliser une perceuse pour cette étape. / Puede que tenga que utilizar un taladro para este paso. / 이 단계에선 드릴을 사용해야 할 수도 있습니다. / Für diesen Schritt können Sie einen Bohrer verwenden.

Wearing protective gloves is recommended. / Le port de gants de protection est recommandé / El uso de guantes de protección se recomienda. / 보호 장갑을 착용 하는 것이 좋습니다 . / Das Tragen von Schutzhandschuhen wird empfohlen.

Two or more people are required at this stage. / Deux personnes ou plus sont nécessaires à cette étape./ Dos o más personas se requieren en esta etapa. /이 단계에서는 두 명 이상 이 필요합니다. / Für diesen Bauschritt sind 2 oder mehr Personen erforderlich.

Do not tighten screws all the way for now. / Ne pas visser fermement pour l'instant. / No atornille con firmeza por ahora. /아직 나사를 단단히 조이지 마십시오 . / Bitte die Schrauben zum jetzigen Zeitpunkt noch nicht fest anziehen.

Sold separately. / Vendus séparément. / vendido en las opciones. / 옵션 판매 / Optional erhältlich

Optional step / Étape optionnelle / Paso opcional / 선택적 단계 / Optionaler Schritt

Assembly video link / Lien vidéo d'installation / enlace de video de ensamblaje / 조립 비디오 링크 / Montage video link

https://www.shelterlogic.com/sojag/videos

The gazebo must be anchored (hardware not included) / Le gazébo doit être ancré (quincaillerie non incluse) /El gazebo debe estar anclado (herramientas no incluidas) / 가제보를 반드시 바닥에 고정 시키세요. (고정 나사 부품 미포함)/ Muss am Boden verankert werden, Befestigungsmaterial nicht im Lieferumfang enthalten

B6 X 8 (EXTRA 2 pcs)

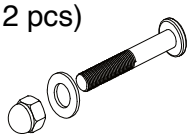

R X 2

S0 X 32 (EXTRA 3 pcs)

S1 X 10 (EXTRA 2 pcs)

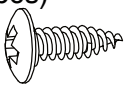

S2 X 8 (EXTRA 2 pcs)

T X 40 (EXTRA 4 pcs)

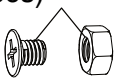

U X 48 (EXTRA 5 pcs)

V X 48 (EXTRA 5 pcs)

V1 X 3 (EXTRA 1 pcs)

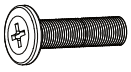

V2 X 8 (EXTRA 2 pcs)

W X 12 (EXTRA 2 pcs)

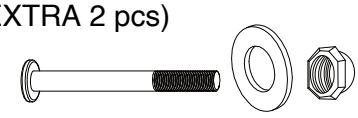

X X 12 (EXTRA 2 pcs)

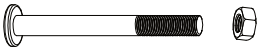

Y X 2 (EXTRA 2 pcs)

Z1 X6

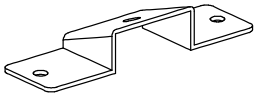

Z2 X 4

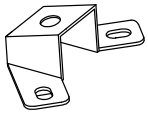

Z3 X 1

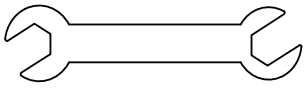

A1 X 10

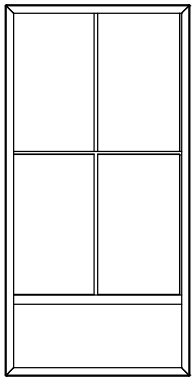

A2 X 2

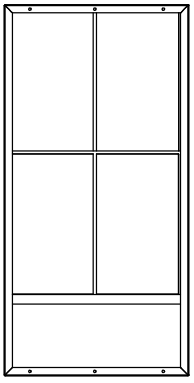

B1 X 2

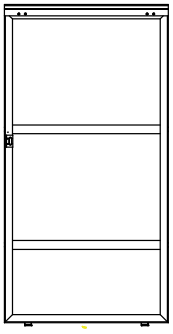

B2 X 2

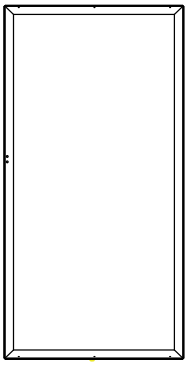

C X 2

D X 20

E X 4

G X 2

H X 2

I X 4

J X 1

K X 1

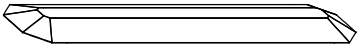

L1 X 4

L2 X 6

M X 8

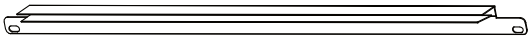

M1 X 2

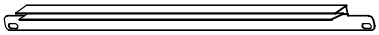

N X 10

O X 4

O1 X 6

P X 2

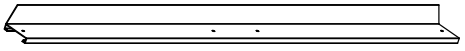

P1 X 4

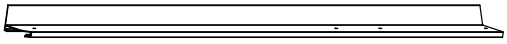

P2 X 4

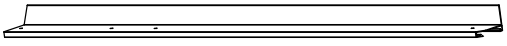

B5 X 4

B7 X 2

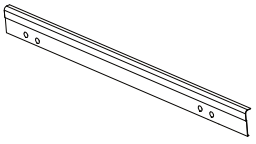

Q X 10

R1 X 2

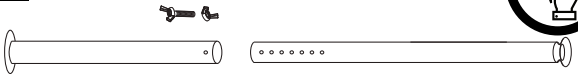

Wa X 4

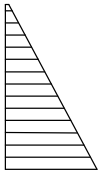

Wb X 4

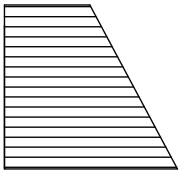

Wc X 4

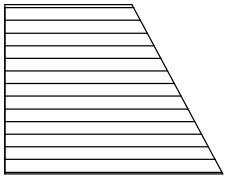

W1a X 4

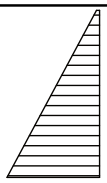

W1b X 4

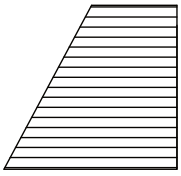

W1c X 4

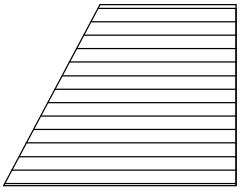

S X 6

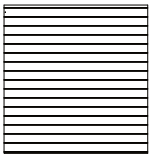

Z X 2

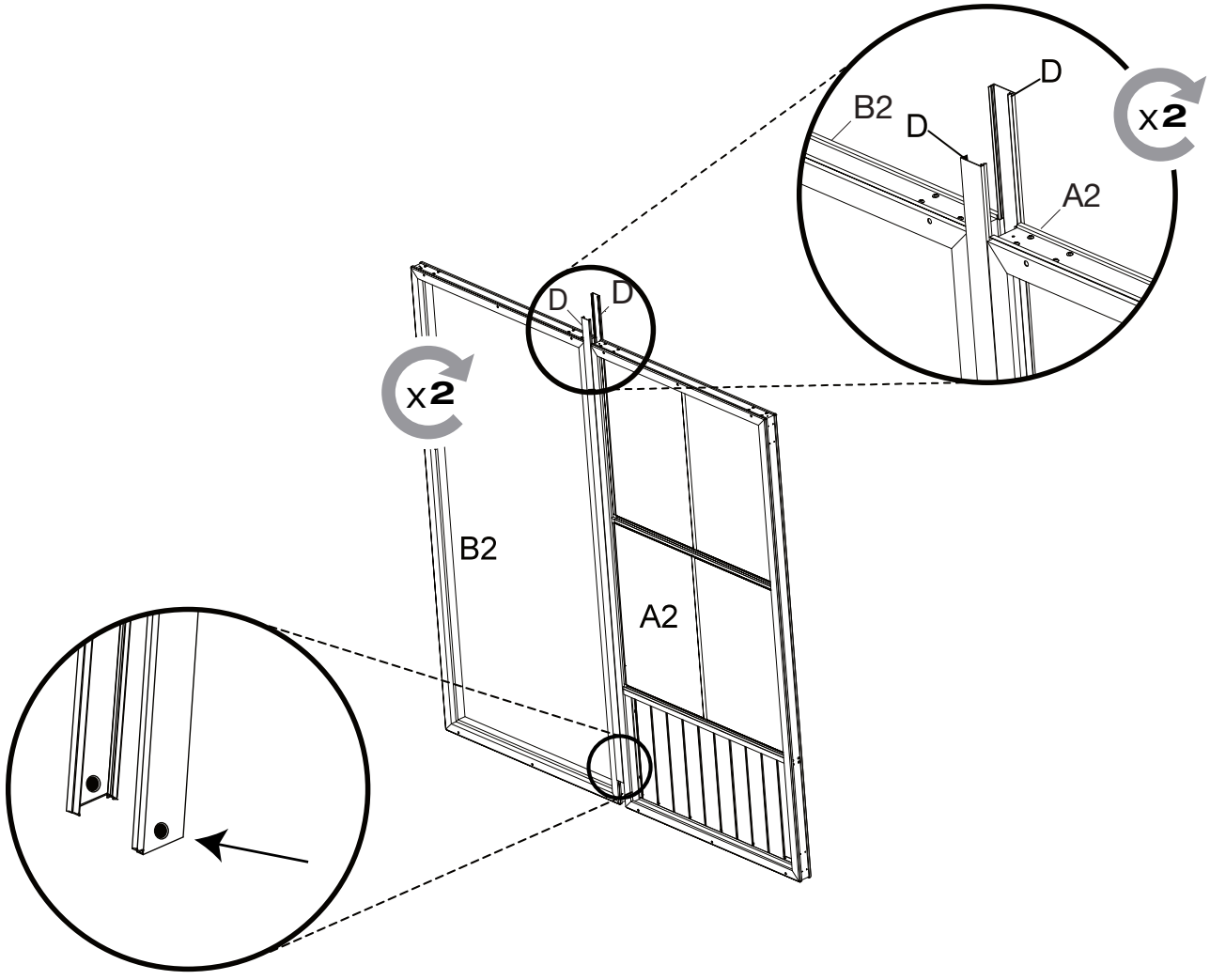
D
B2
D
x2
A2
D
D
x2
B2
A2

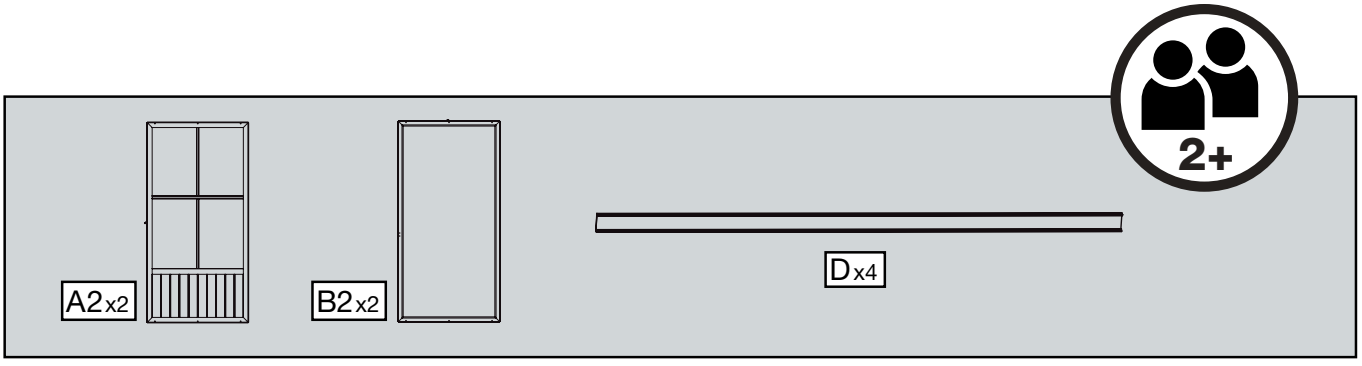
2+
A2x2
B2x2
Dx4

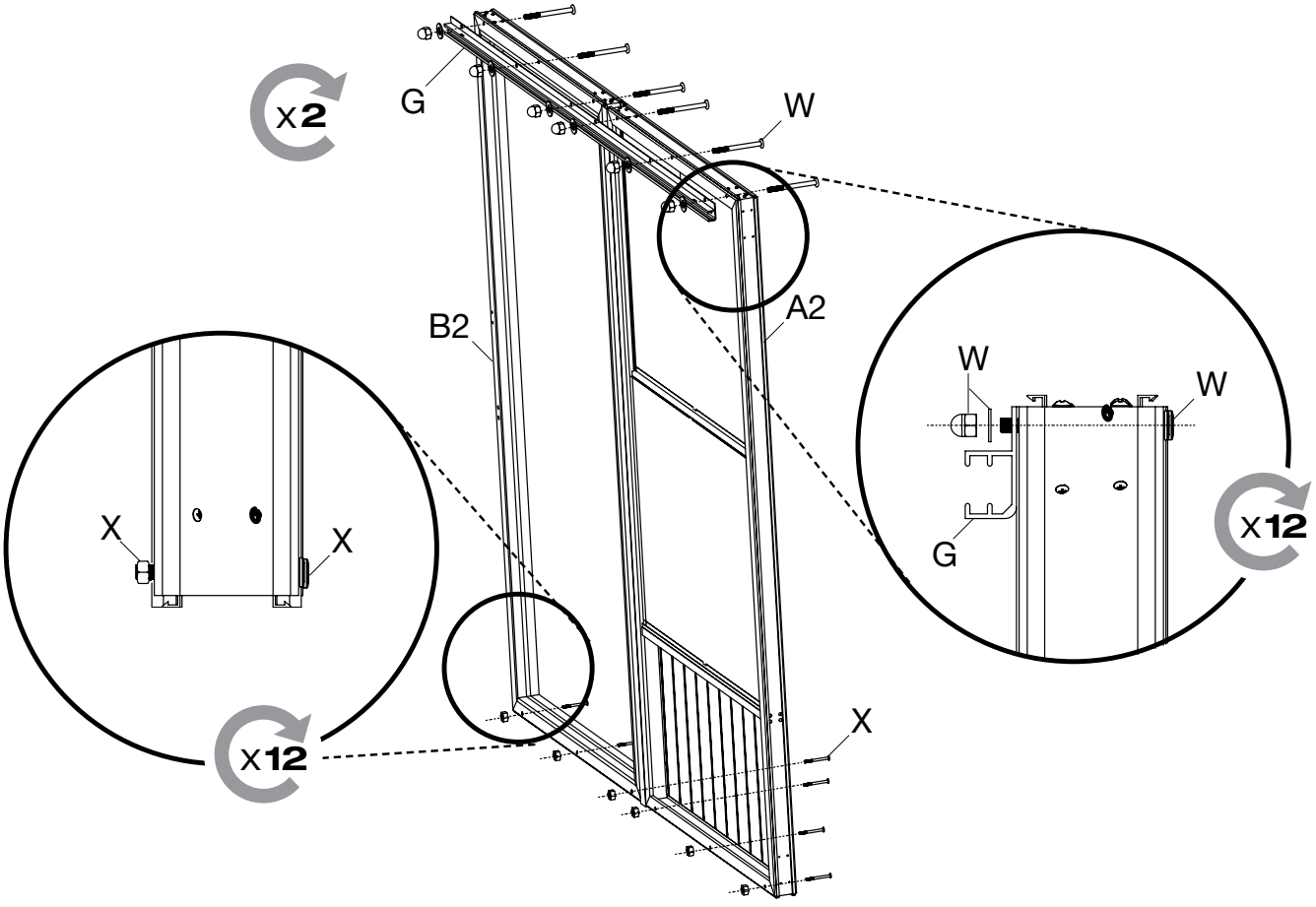
x2
G
W
B2
A2
W
W
G
x12
X
X
x12
X

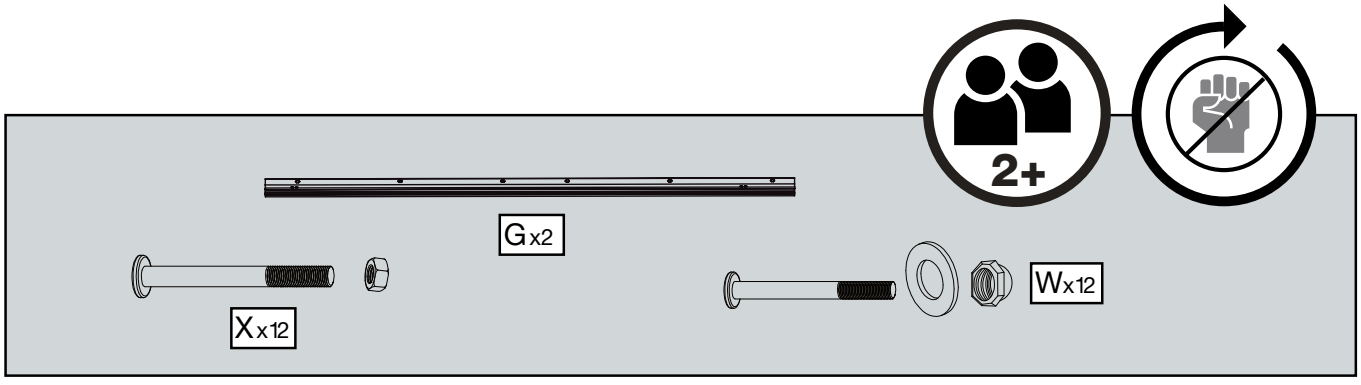
2+
Gx2
Xx12
Wx12

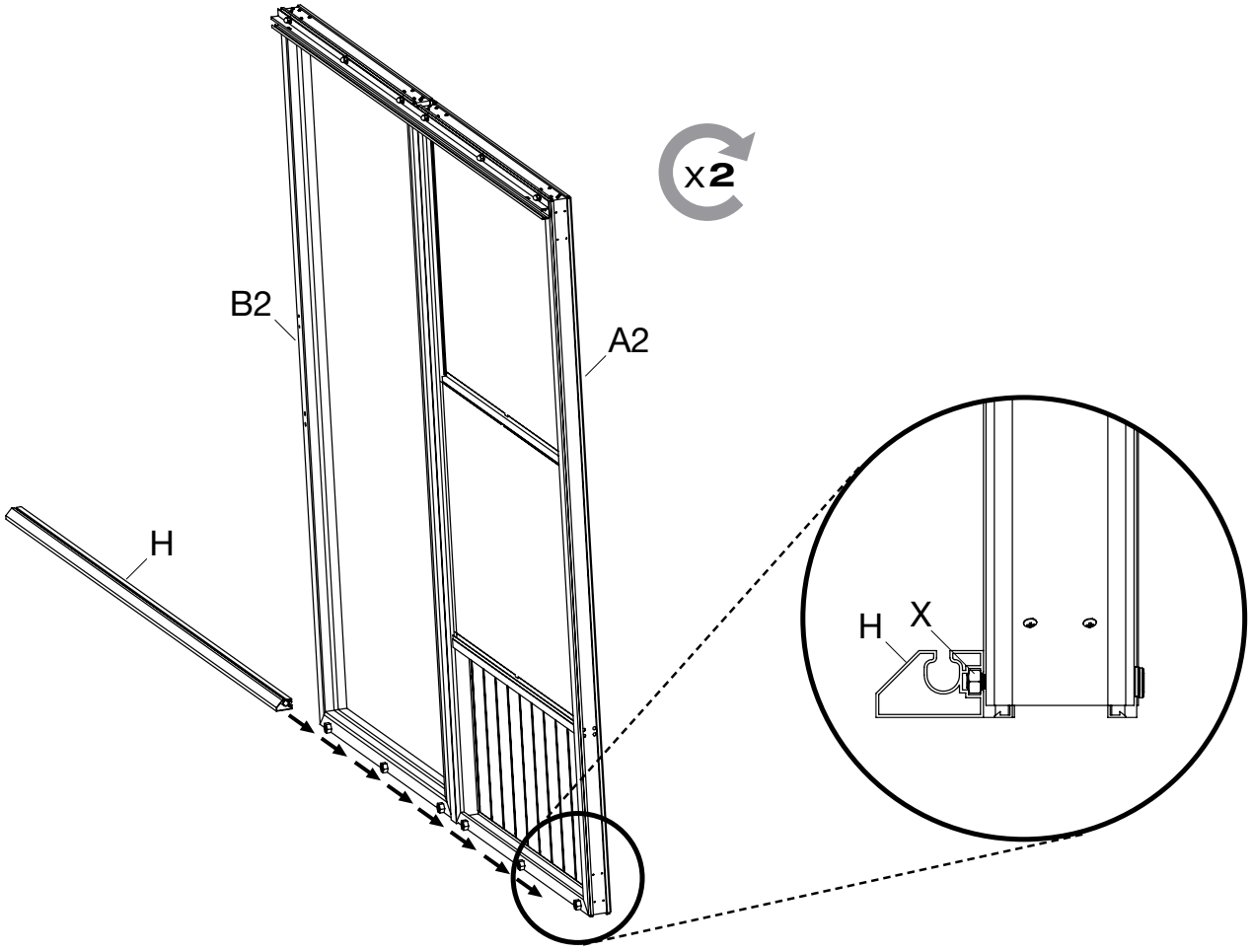
x2
B2
A2
H
H
X

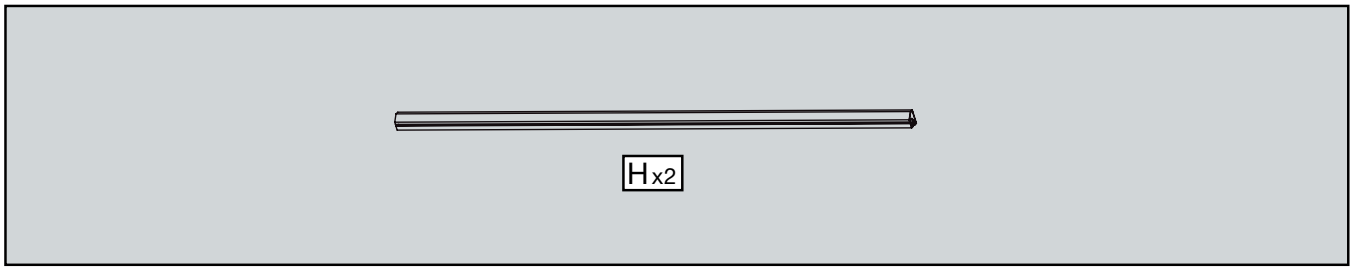
Hx2

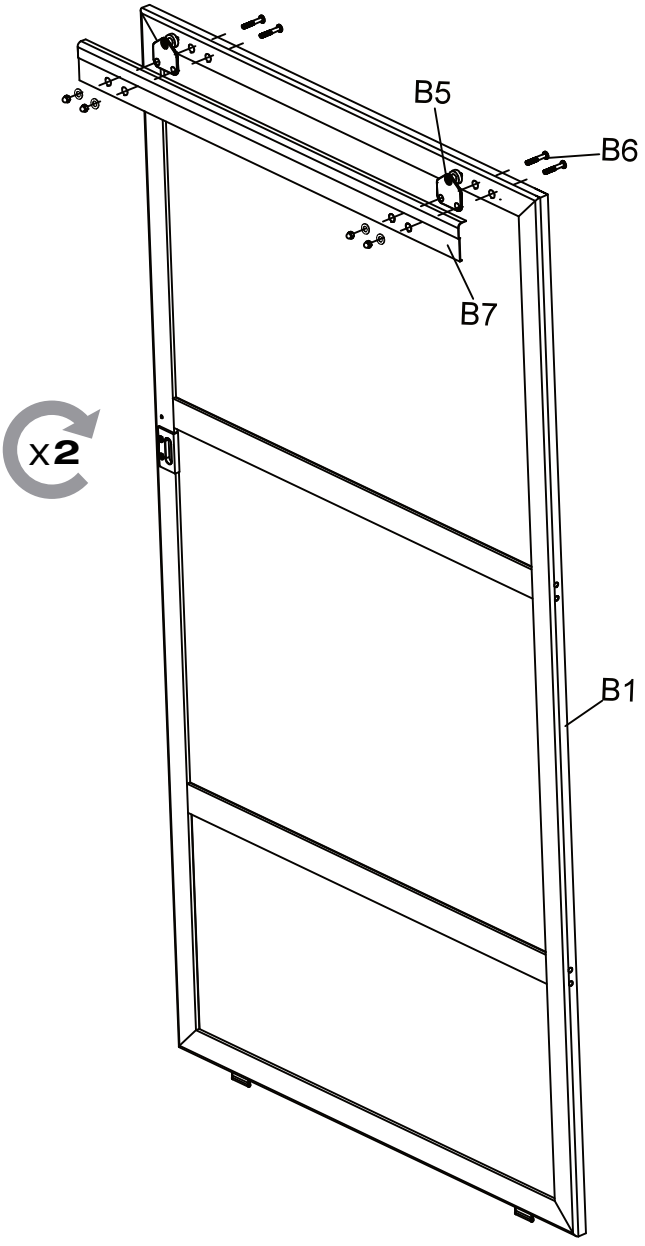
B5
B6
B7
x2
B1

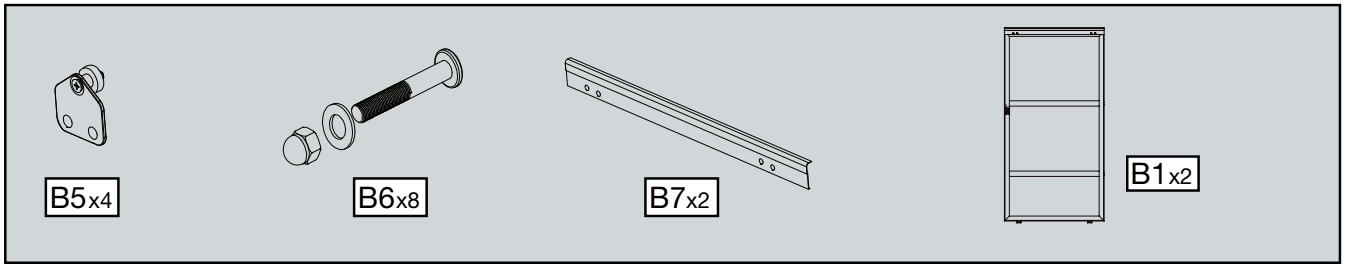
B5x4
B6x8
B7x2
B1x2

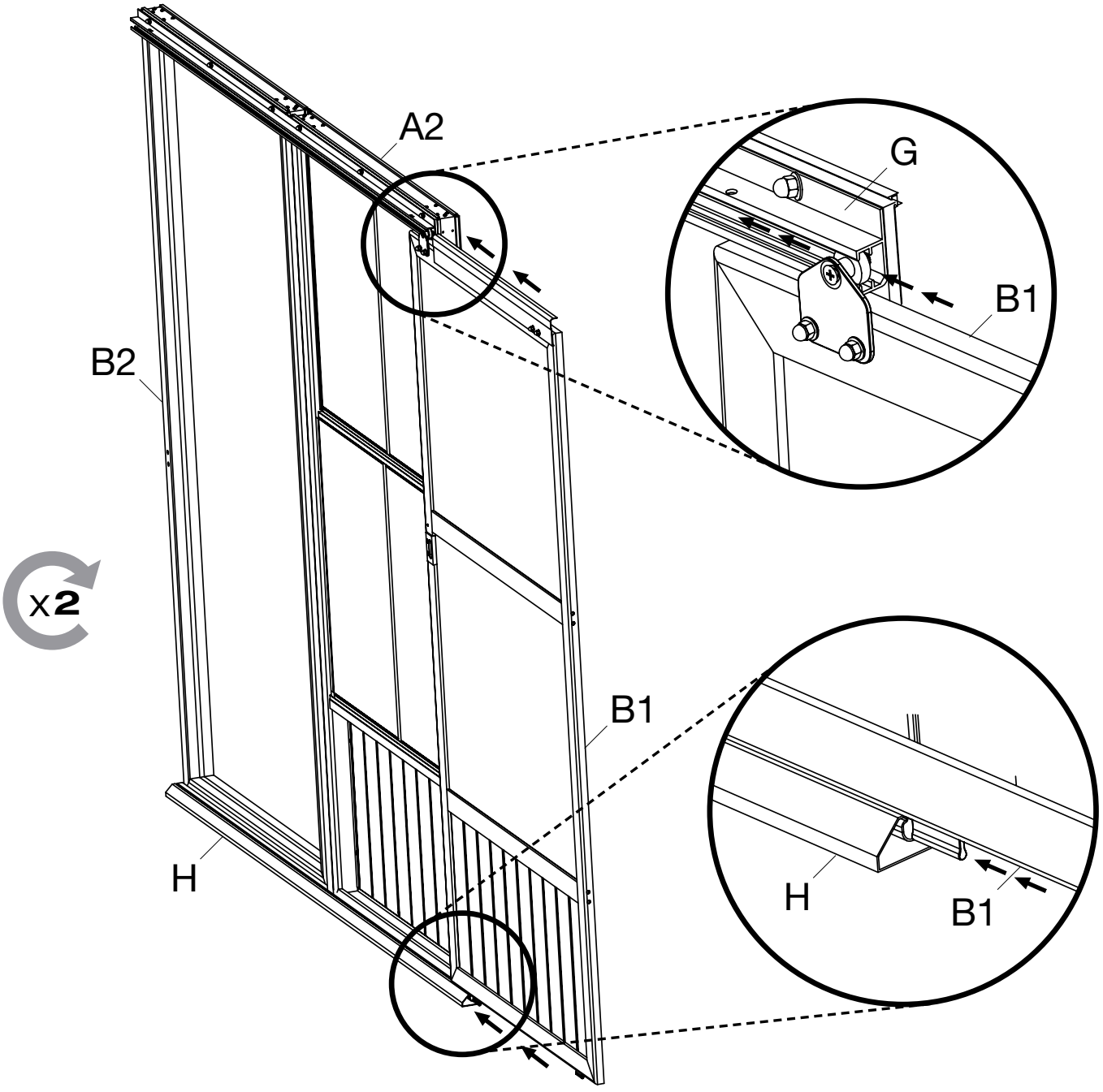
A2
G
B1
B2
x2
B1
H
H
B1

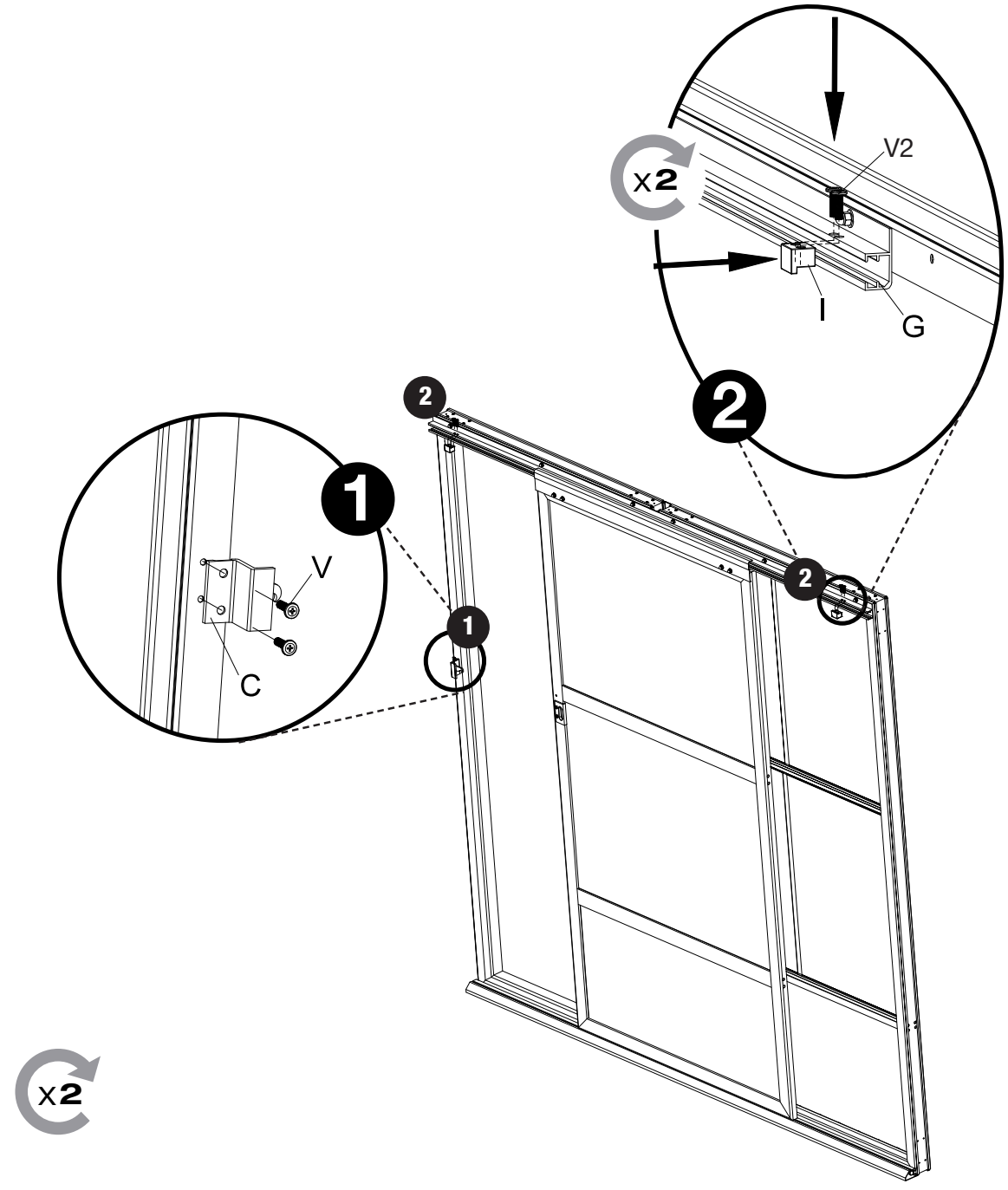
x2
V2
I
G
2
2
1
V
C
1
2
x2

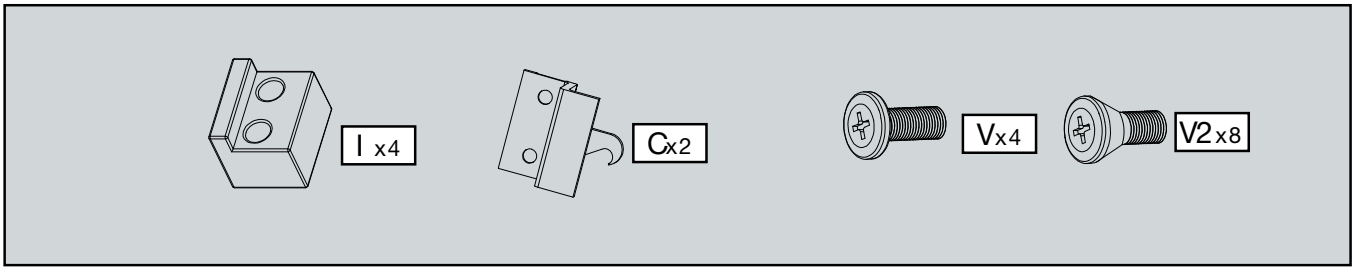
I x4
Cx2
Vx4
V2x8

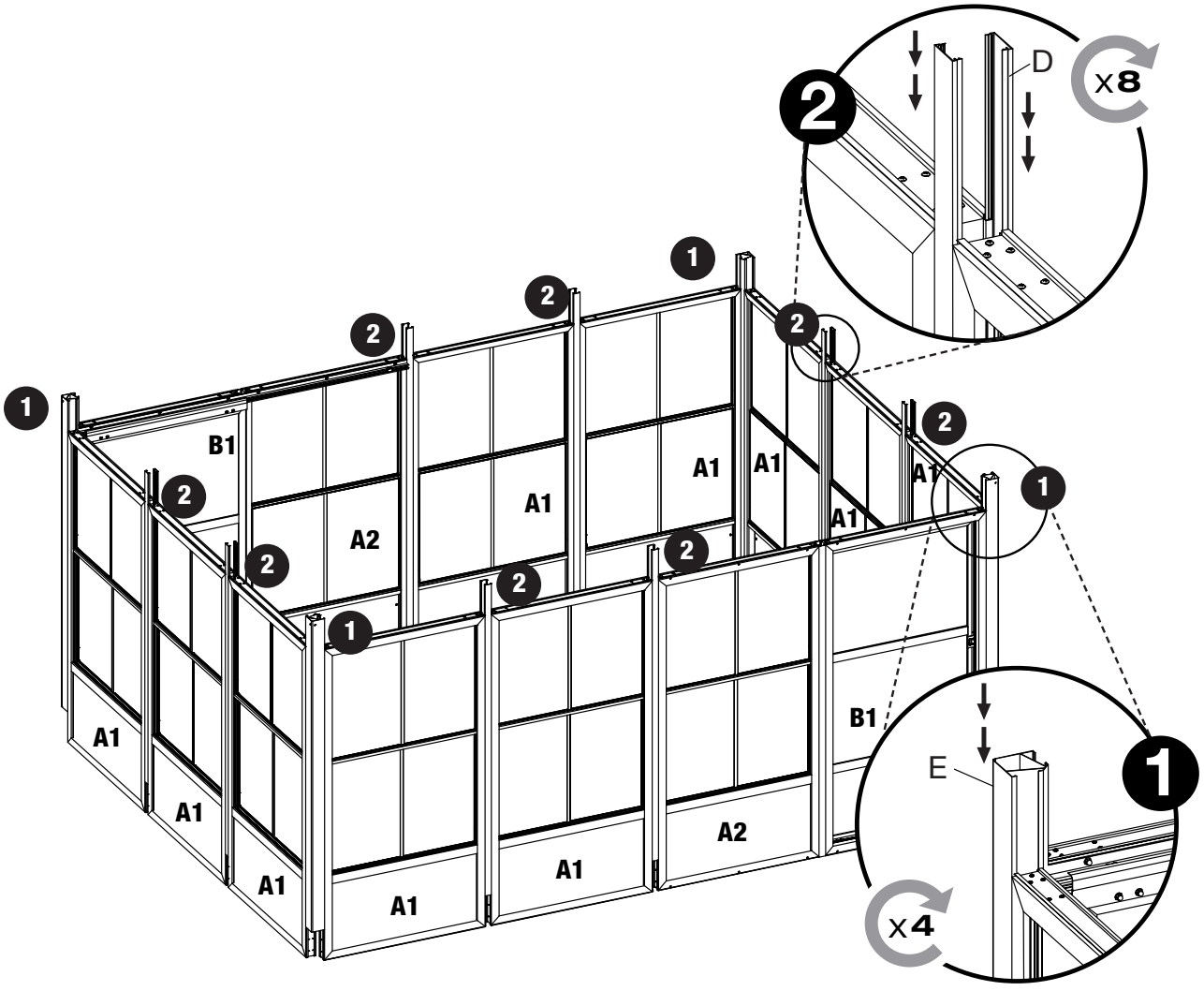
D
x8
2
1
2
2
2
1
B1
2
A1
A1
A1
2
A1
A2
2
2
2
1
1
B1
E
1
A1
A1
A1
A2
A1
A1
x4

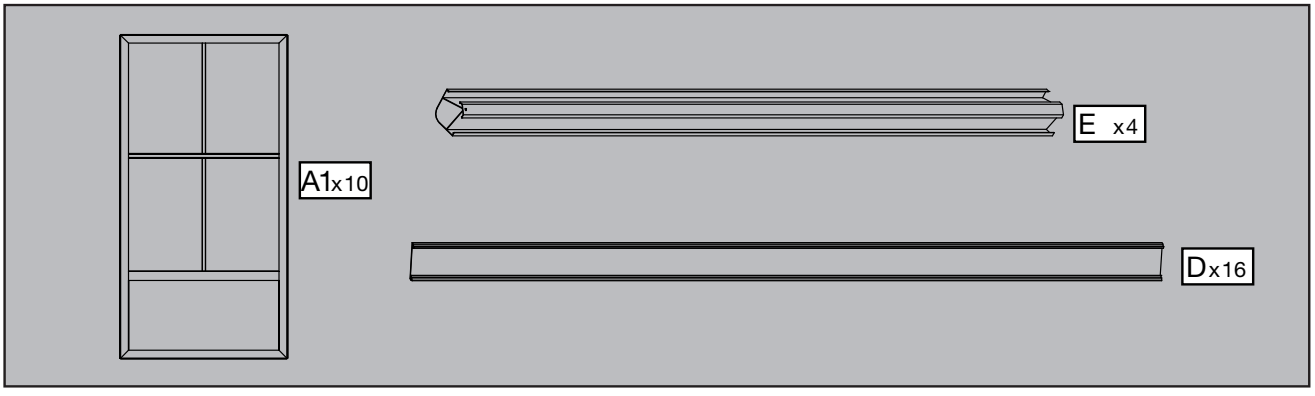
A1x10
E x4
Dx16

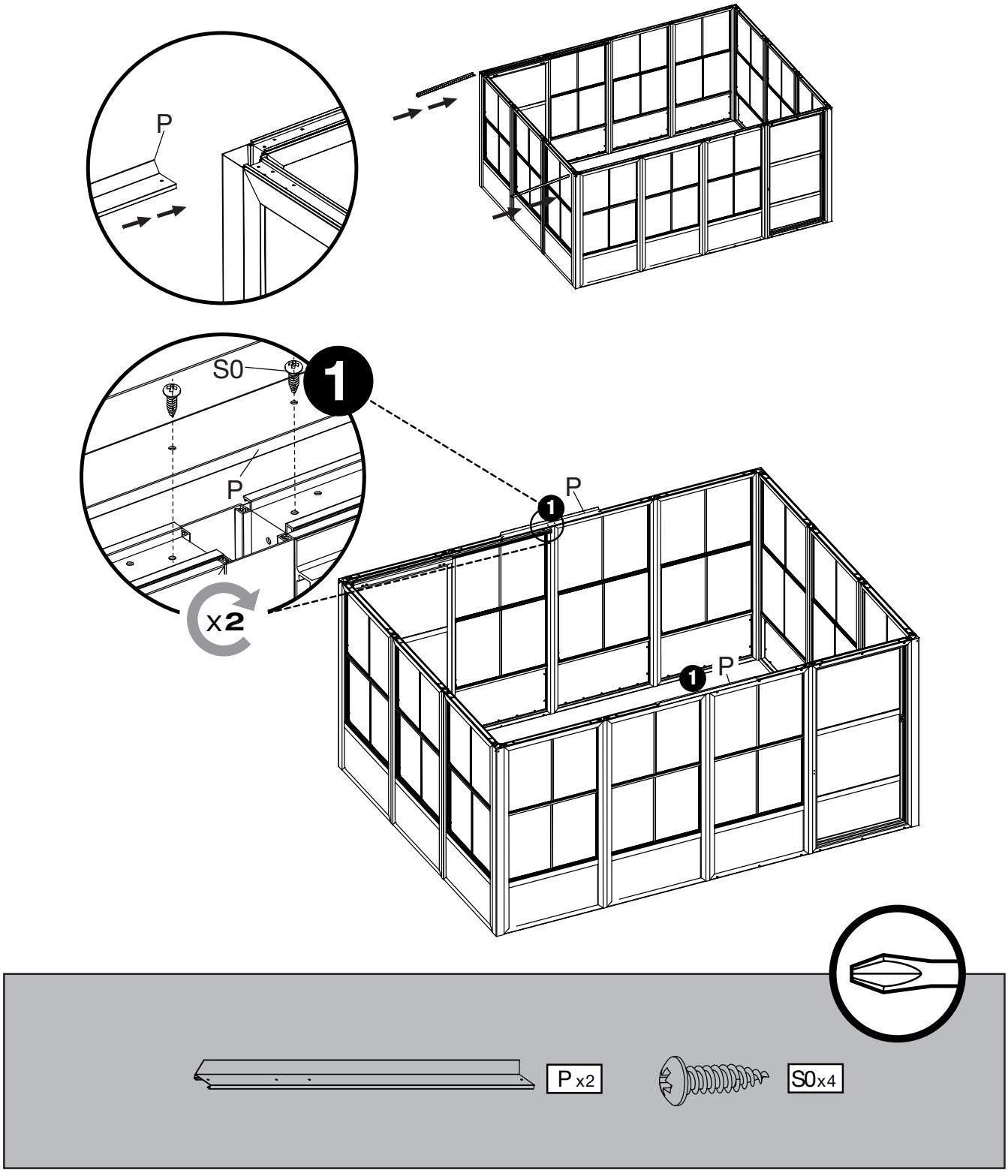
P
S0
1
P
P
x2
1
P
1
P x2
S0 x4

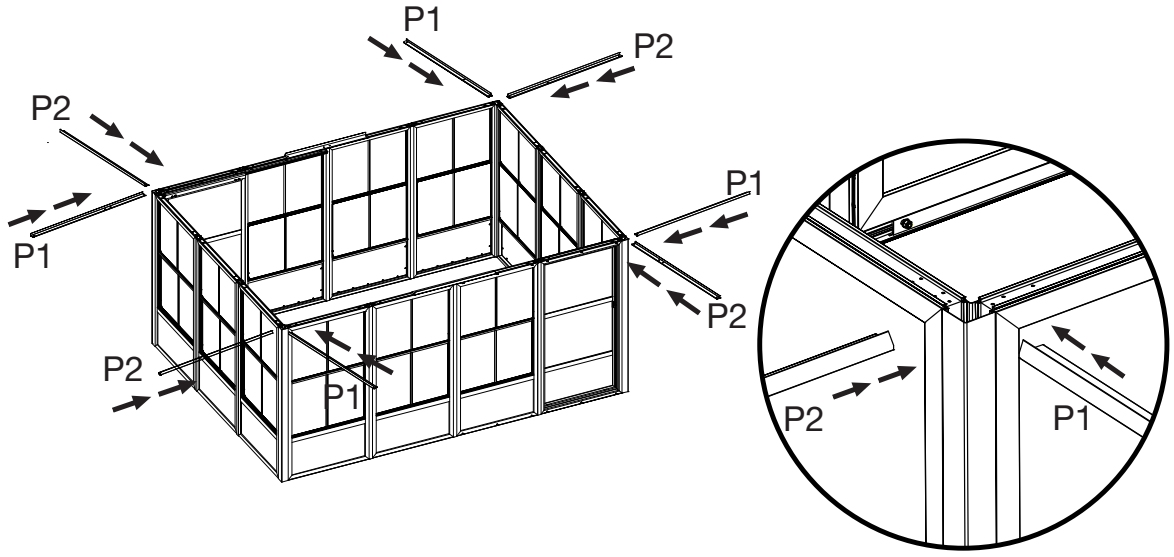
P1
P2
P2
P1
P1
P2
P2
P1
P2
P1

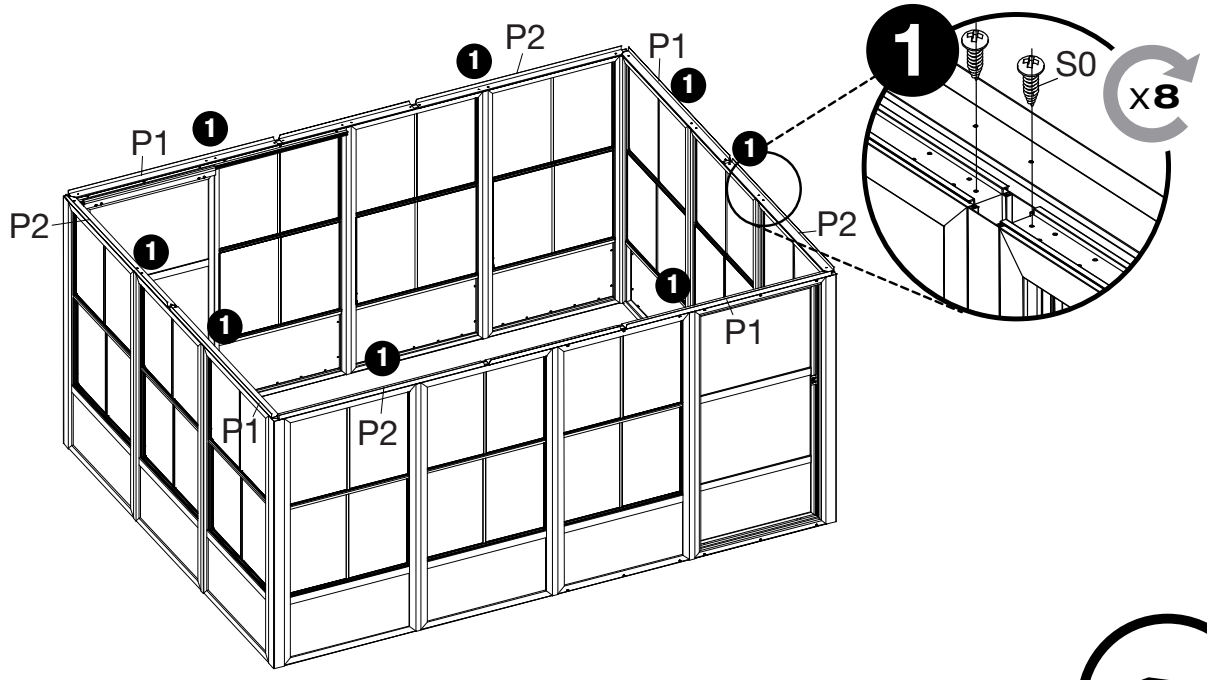
P2
P1
P1
P2
P2
P1
P1
P2
1
S0
x8

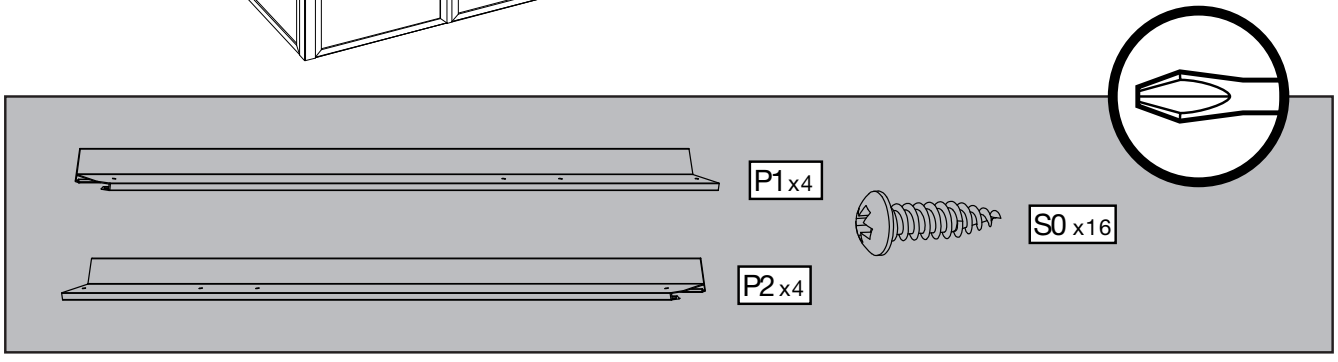
P1 x4
S0 x16
P2 x4

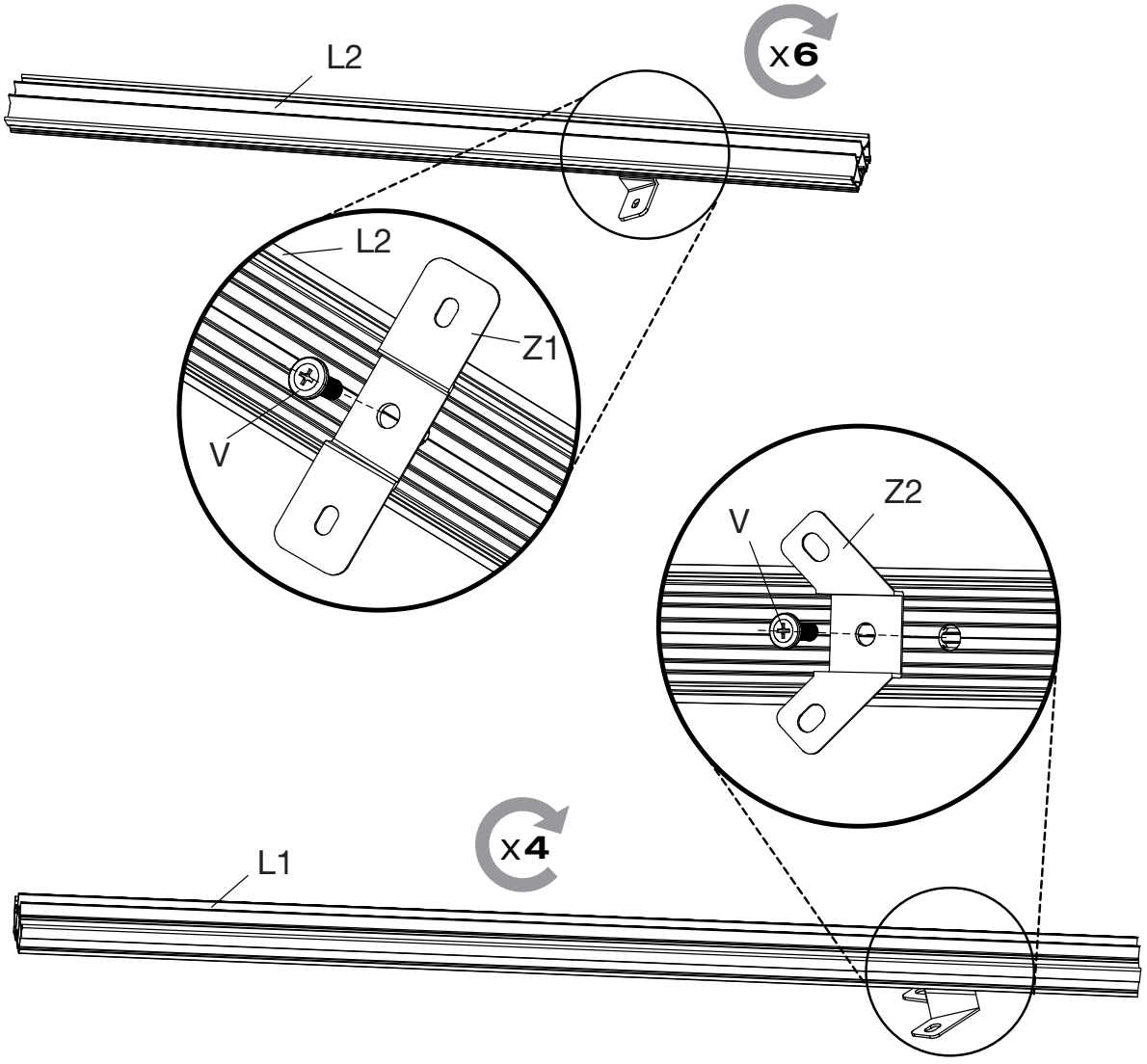
L2
x6
L2
Z1
V
Z2
V
x4
L1

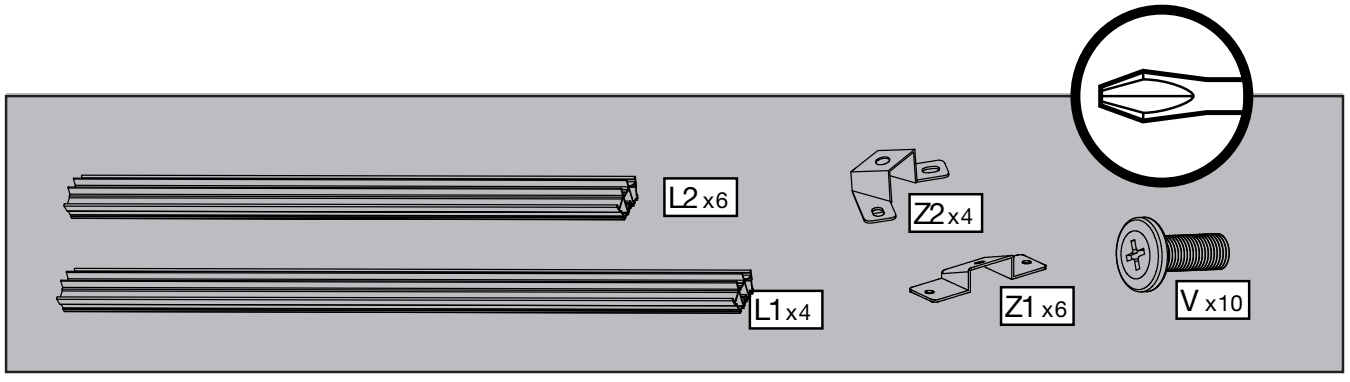
L2 x6
Z2 x4
L1 x4
Z1 x6
V x10

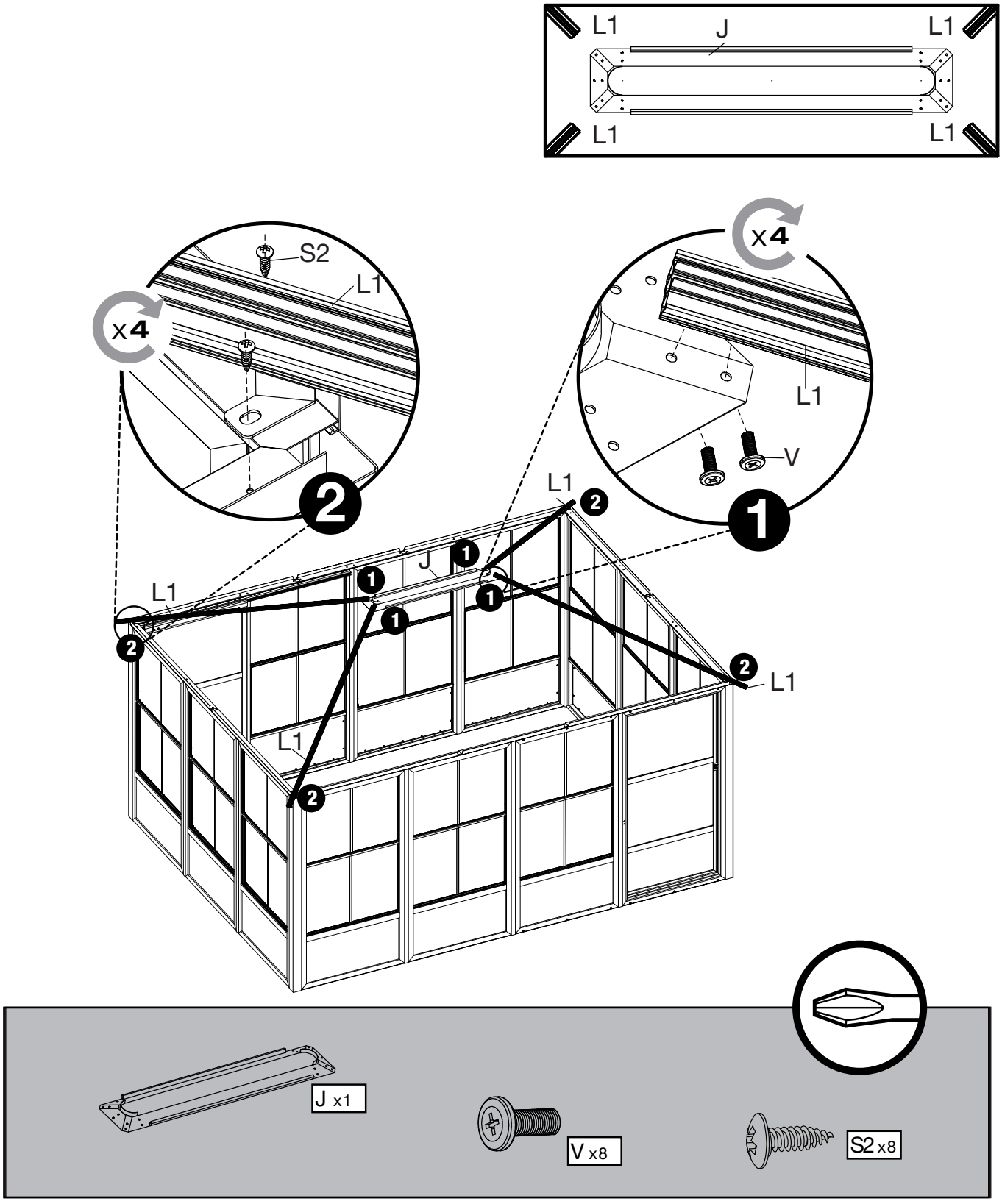
L1
J
L1
L1
L1
S2
L1
x4
x4
L1
V
2
1
L1
2
J
1
1
1
1
L1
2
2
L1
L1
2
J x1
V x8
S2 x8

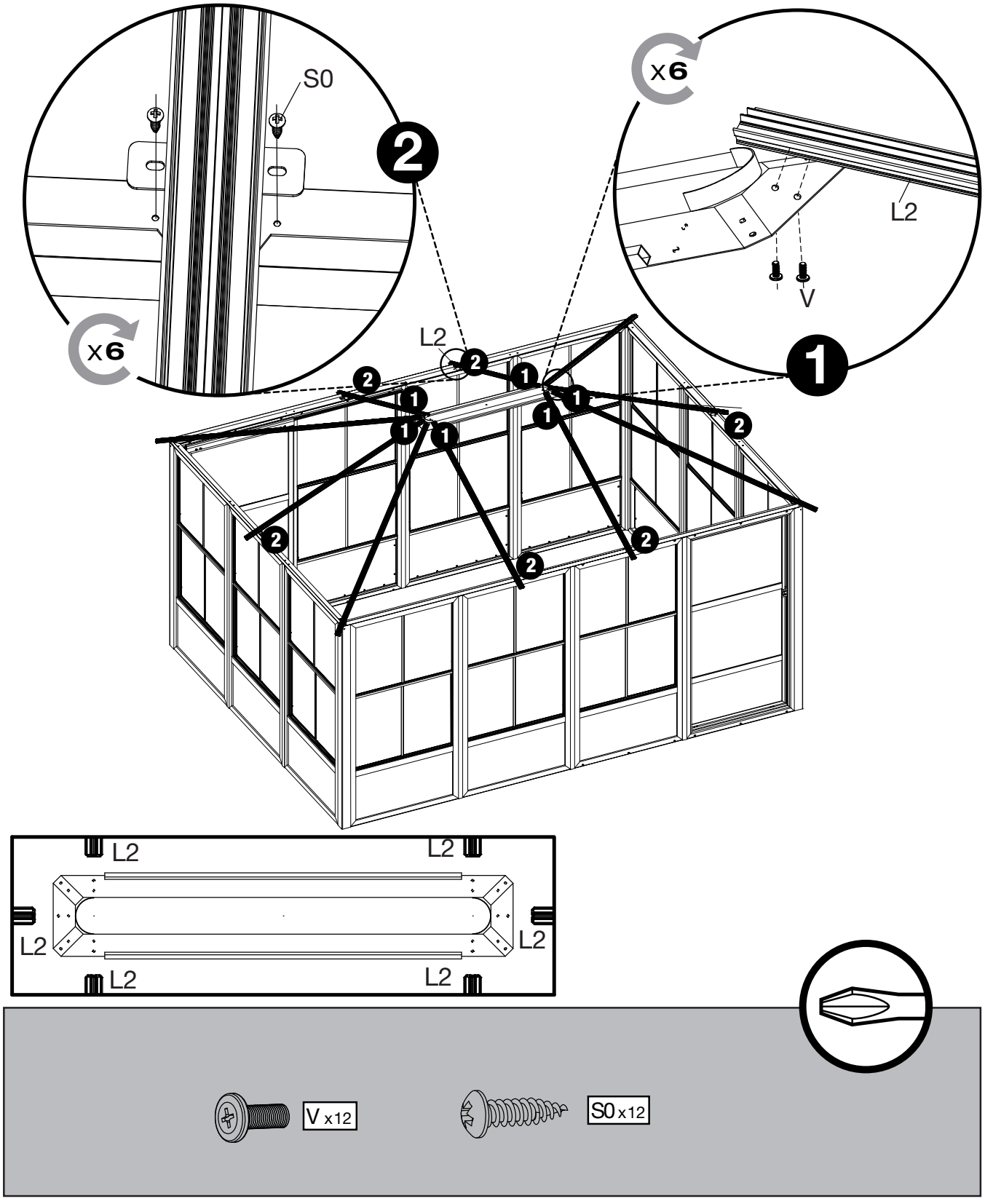
S0
x6
2
x6
L2
V
1
L2
2
1
1
1
1
1
1
2
2
2
2
2
L2
L2
L2
L2
L2
L2
V x12
S0 x12

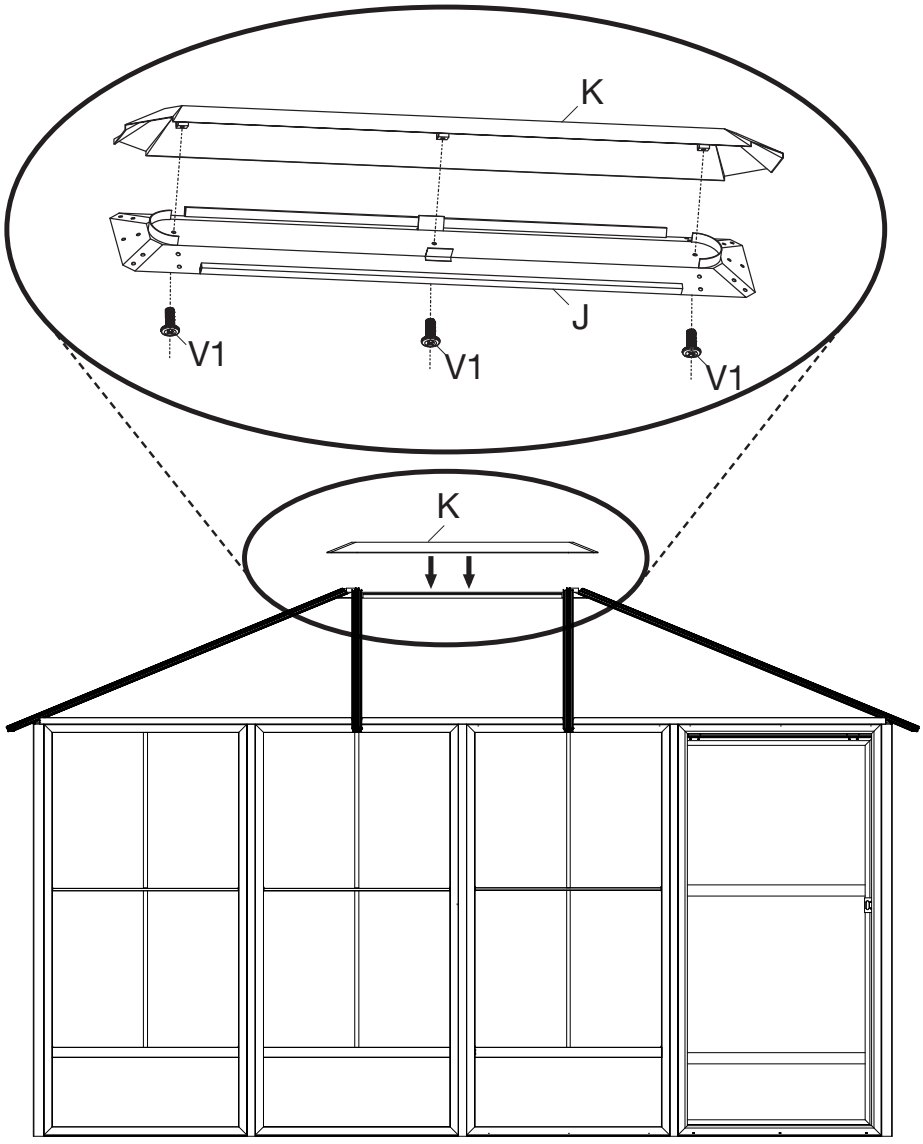
K
J
V1
V1
V1
K

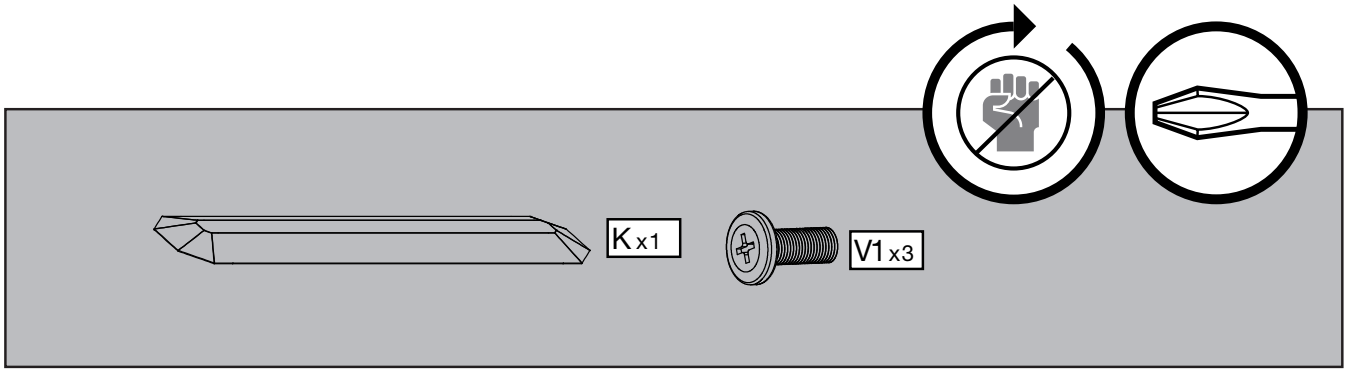
K x1
V1 x3

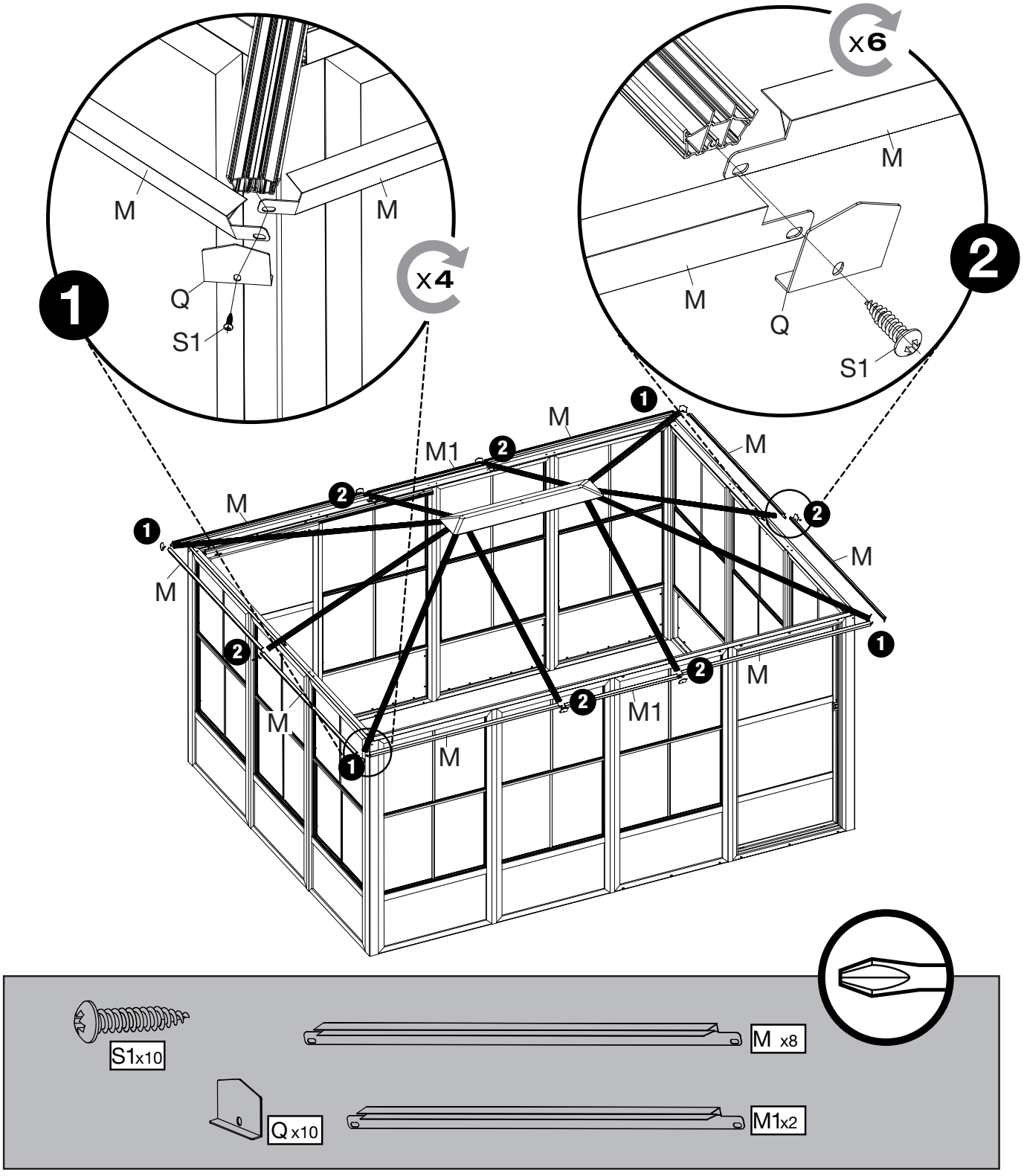
1
M
M
Q
S1
x4
x6
M
M
Q
S1
2
M
M1
M
M
M
M
M
M
M1
M
M
M
S1x10
M x8
Q x10
M1x2

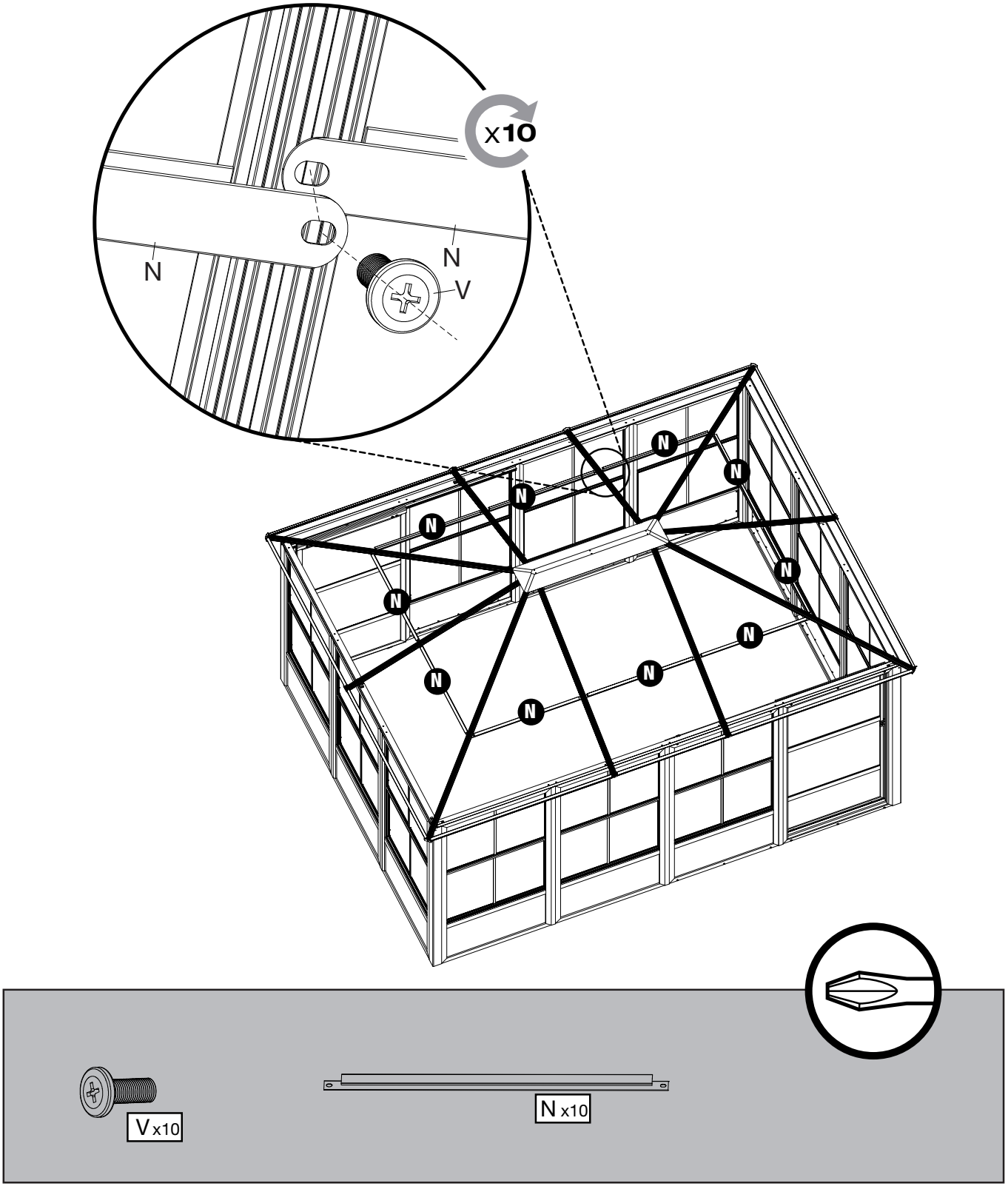
x10
N
N
V
N
N
N
N
N
N
N
N
N
N
N
V x10
N x10

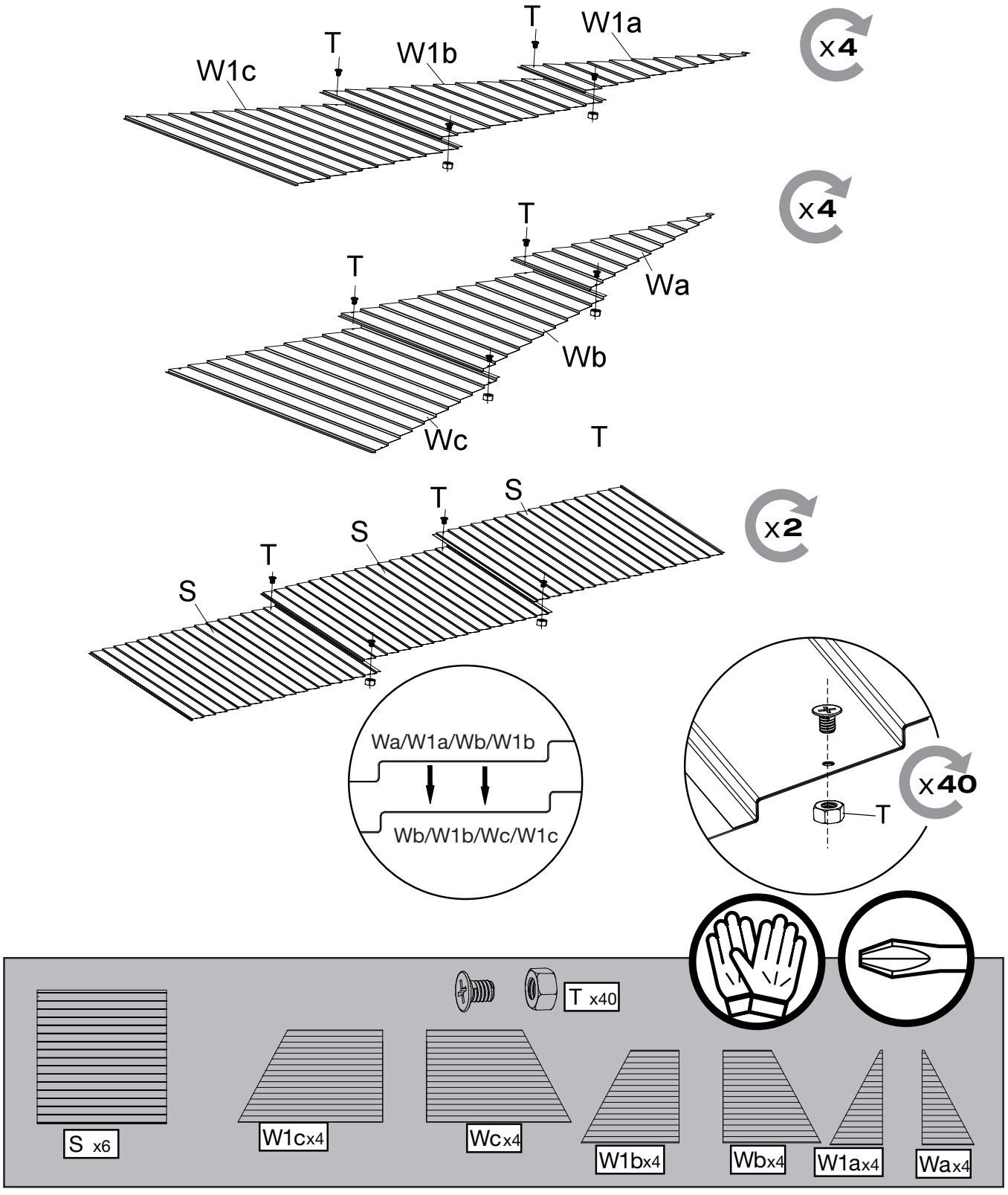
T
W1a
T
W1b
W1c
x4
x4
T
T
Wa
Wb
Wc
T
T
S
x2
S
T
S
Wa/W1a/Wb/W1b
Wb/W1b/Wc/W1c
x40
T
T x40
S x6
W1cx4
Wcx4
W1bx4
Wbx4
W1ax4
Wax4

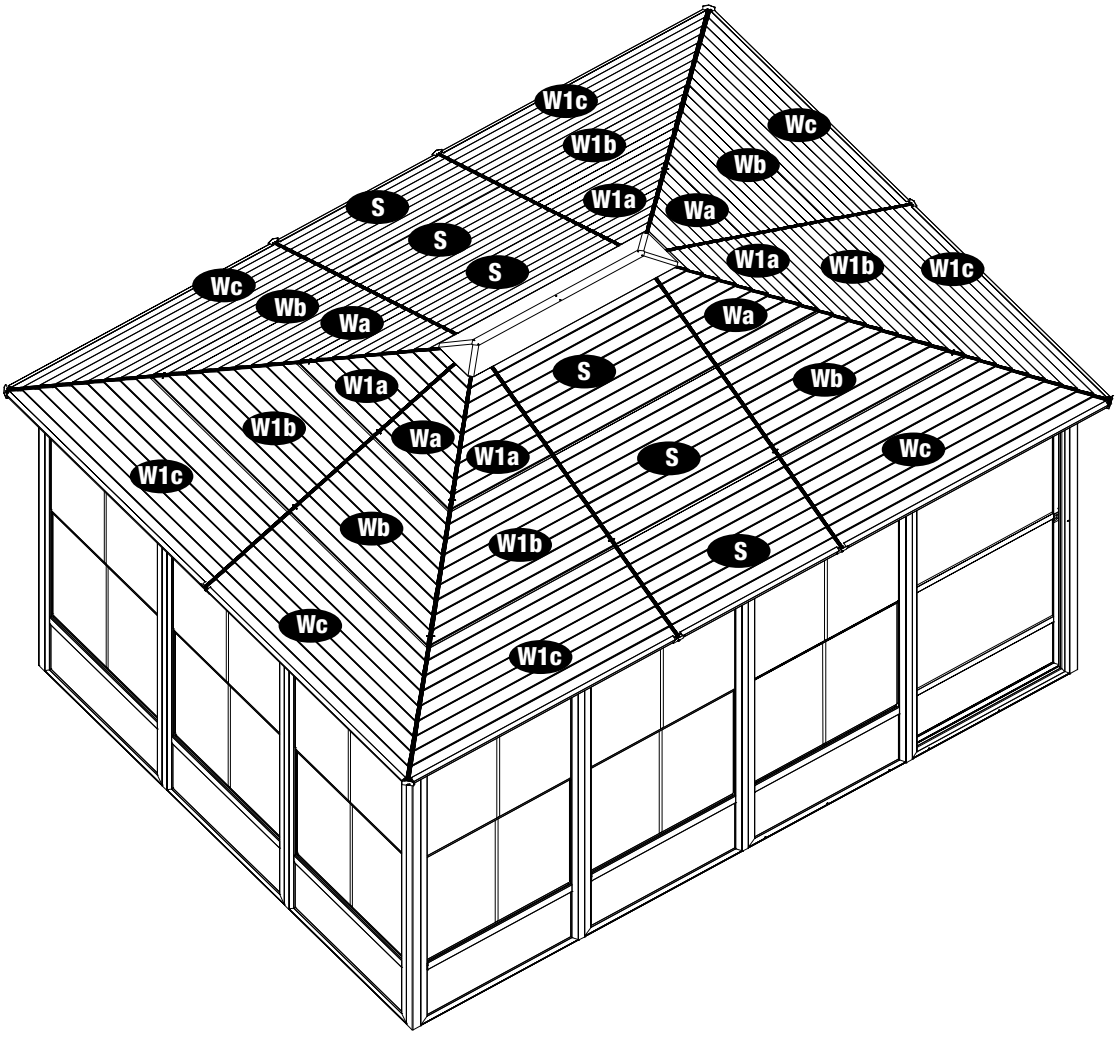
W1c
W1b
W1a
Wa
Wb
Wc
S
S
S
Wc
Wb
Wa
W1a
W1b
W1c
Wa
S
Wb
W1a
W1b
Wa
W1a
S
Wc
W1c
Wb
W1b
S
Wc
W1c

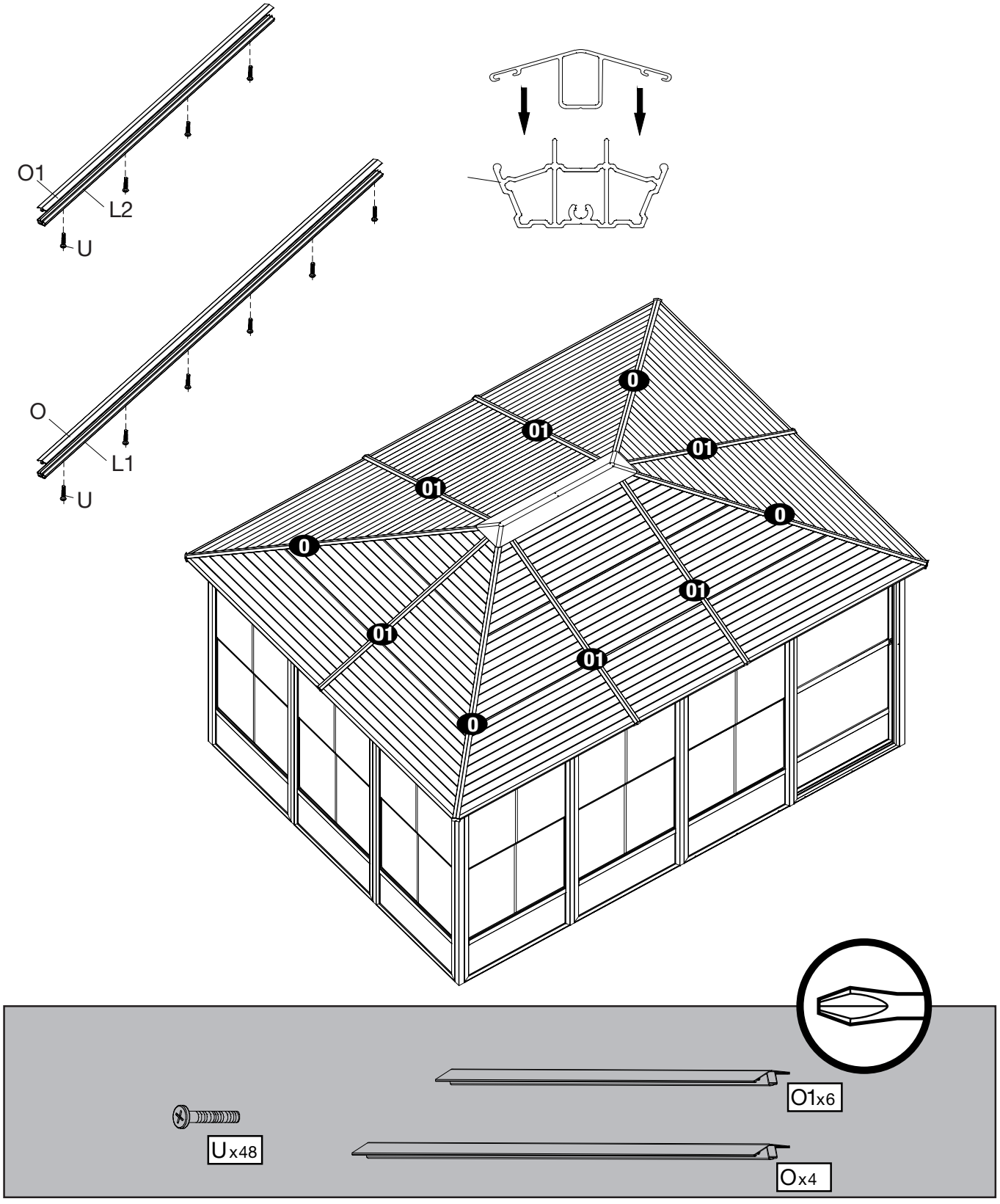
O1
L2
U
O
L1
U
0
01
01
01
0
01
01
01
0
O1x6
Ux48
Ox4

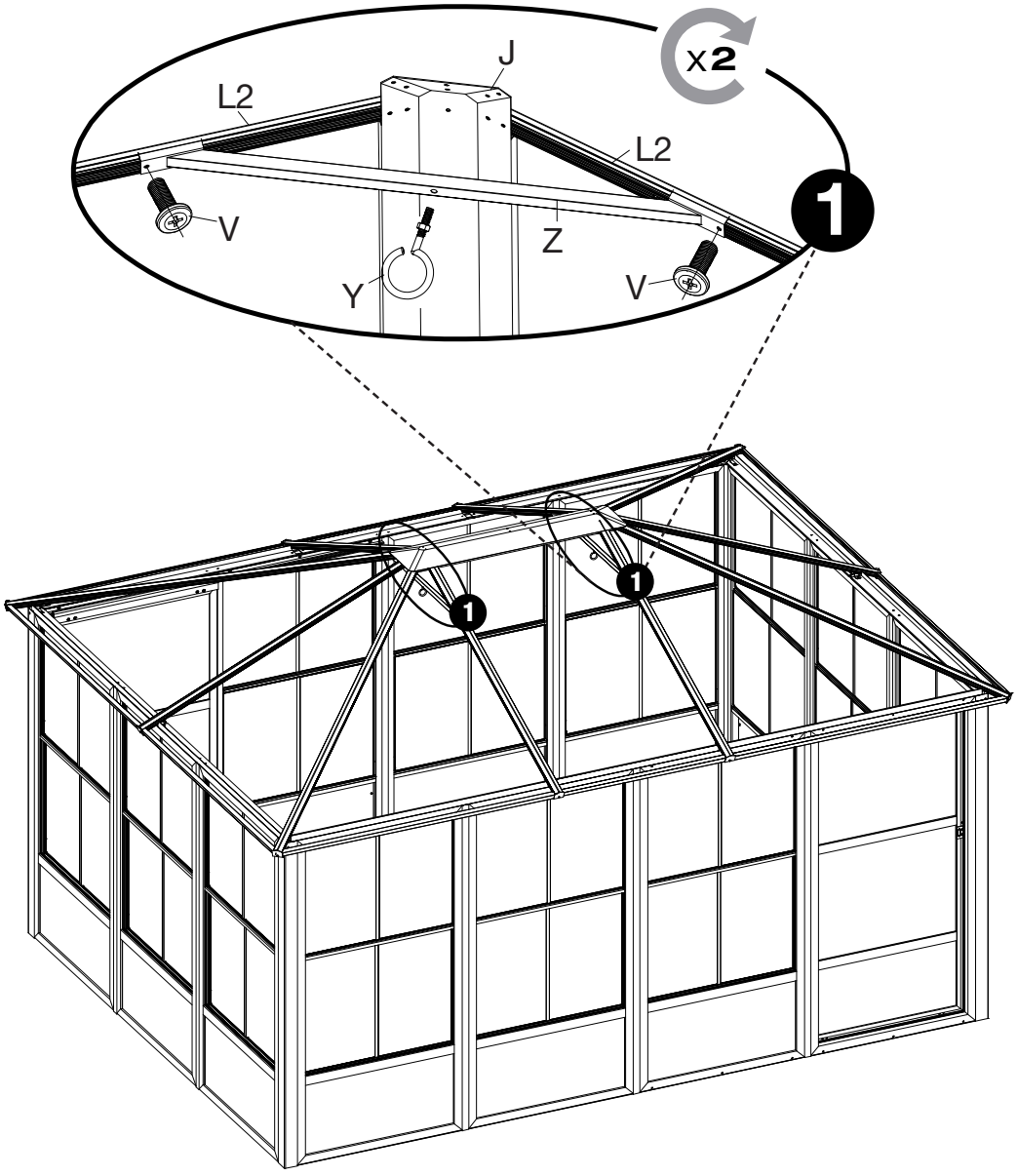
x2
J
L2
L2
V
Z
Y
V
1
1
1

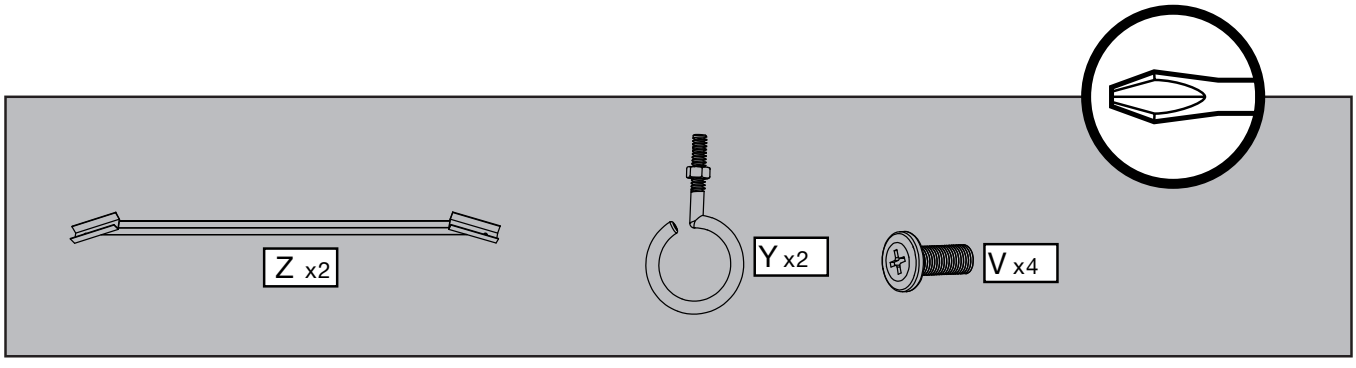
Z x2
Y x2
V x4

Optional step: Winter support post
Étape optionnelle: Barre de renfort hivernale
Paso opcional: Barra de refuerzo de invierno
선택적 단계: 겨울 서포트 포스트
Optionaler Schritt: Winter-Stützpunkt

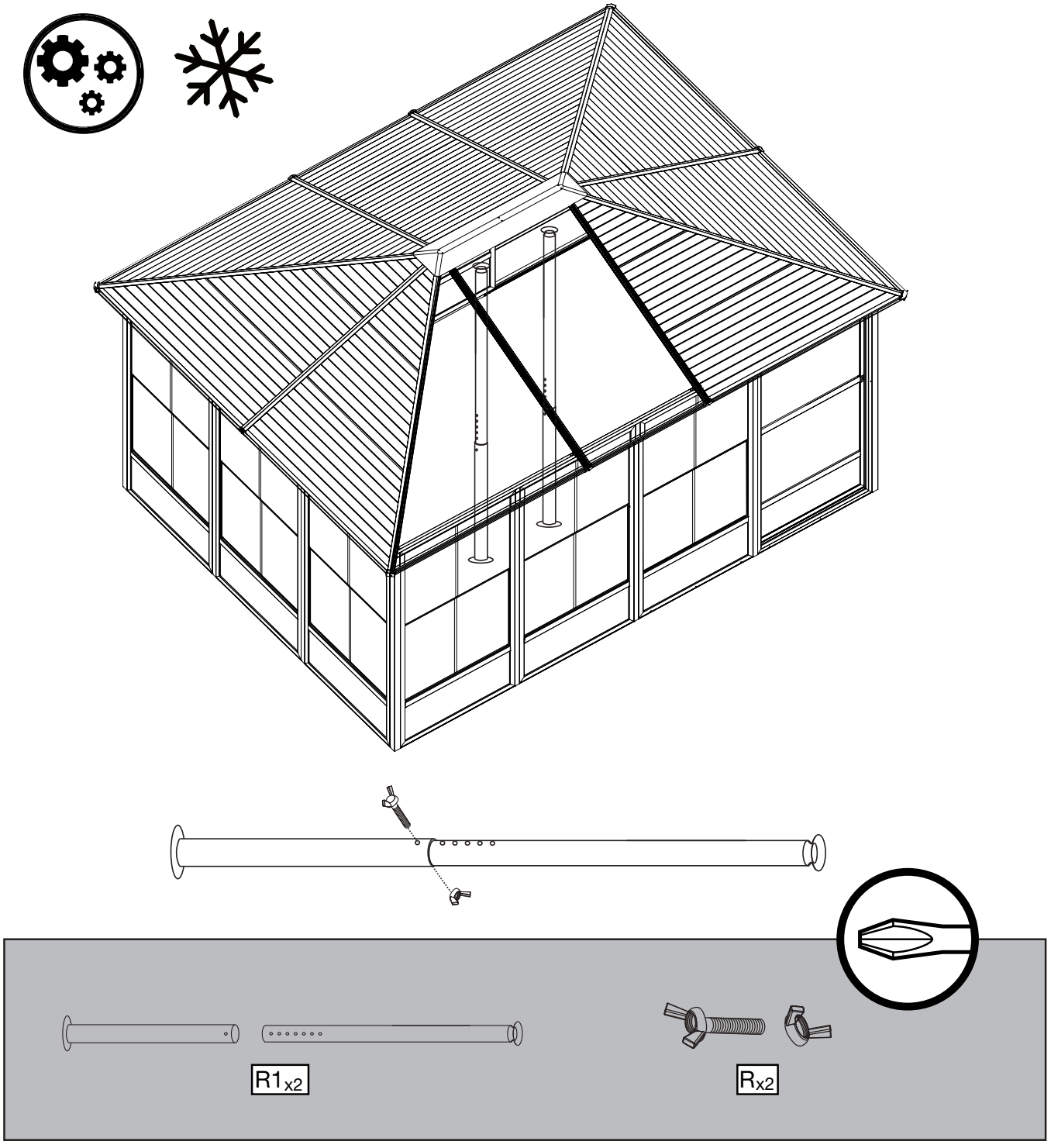

NOTE, NOTES, NOTAS

NOTE, NOTES, NOTAS

DISTRIBUTED BY:
COSTCO WHOLESALE CORPORATION
P.O. BOX 34535
SEATTLE, WA 98124-1535
USA
1-800-774-2678
WWW.COSTCO.COM

IMPORTADO POR:
IMPORTADORA PRIMEX S.A. DE C.V.
BLVD. MAGNOCENTRO NO. 4
SAN FERNANDO LA HERRADURA
HUIXQUILUCAN, ESTADO DE MÉXICO
C.P. 52765
RFC: IPR-930907-S70
(55)-5246-5500
WWW.COSTCO.COM.MX

COSTCO WHOLESALE SPAIN S.L.U.
POLÍGONO EMPRESARIAL LOS GAVILANES
C/ AGUSTÍN DE BETANCOURT, 17
28906 GETAFE (MADRID) ESPAÑA
NIF: B86509460
900 111 155
WWW.COSTCO.ES

COSTCO WHOLESALE ICELAND EHF.
KAUPTÚN 3-7, 210 GARDABAER
ICELAND
WWW.COSTCO.IS

COSTCO WHOLESALE KOREA, LTD.
40, ILJIK-RO
GWANGMYEONG-SI
GYEONGGI-DO, 14347, KOREA
1899-9900
WWW.COSTCO.CO.KR

COSTCO (CHINA) INVESTMENT CO., LTD.
ROOM 1003, BLOCK 2, 2388 XIUPU ROAD,
PUDONG NEW AREA, SHANGHAI
CHINA 201315
+86-21-6257-7065

COSTCO WHOLESALE SWEDEN AB
BOX 614
114 11 STOCKHOLM
SWEDEN
WWW.COSTCO.SE

COSTCO WHOLESALE CANADA LTD.*
415 W. HUNT CLUB ROAD
OTTAWA, ONTARIO
K2E 1C5, CANADA
1-800-463-3783
WWW.COSTCO.CA
* FAISANT AFFAIRE AU QUÉBEC SOUS
LE NOM LES ENTREPÔTS COSTCO

COSTCO WHOLESALE UK LTD /
COSTCO ONLINE UK LTD
HARTSPRING LANE
WATFORD, HERTS
WD25 8JS
UNITED KINGDOM
01923 213113
WWW.COSTCO.CO.UK

COSTCO FRANCE
1 AVENUE DE BRÉHAT
91140 VILLEBON-SUR-YVETTE
FRANCE
01 80 45 01 10
WWW.COSTCO.FR

COSTCO WHOLESALE AUSTRALIA PTY LTD
17-21 PARRAMATTA ROAD
LIDCOMBE NSW 2141
AUSTRALIA
WWW.COSTCO.COM.AU

COSTCO WHOLESALE JAPAN LTD.
2 KAKUCHI, 2 GAIKU
KANEDA-NISHI 361 URIKURA,
KISARAZU SHI CHIBA,
292-0007 JAPAN
0570-200-800 • WWW.COSTCO.CO.JP

COSTCO WHOLESALE NEW ZEALAND LIMITED
2 GUNTON DRIVE
WESTGATE
AUCKLAND 0814
NEW ZEALAND
WWW.COSTCO.CO.NZ

MADE IN CHINA
FABRIQUÉ EN CHINE
HECHO EN CHINA

Register • Enregistrer • Regístrate
온라인 등록 • Registrieren

ShelterLogic.com/product-registration

SOJAG

© Sojag inc.